SERVICE MANUAL

AE-2B CHASSIS

MODEL	COMMANDER	DEST.	CHASSIS NO.	MODEL	COMMANDER	DEST.	CHASSIS NO.
KV-X2971A	RM-831	Italian	SCC-G59A-A	KV-X2973E	RM-831	Spanish	SCC-G56A-A
KV-X2971B	RM-831	French	SCC-G57A-A	KV-X2971K	RM-831	OIRT	SCC-G73A-A
KV-X2971D	RM-831	AEP	SCC-G45A-A	KV-X2972U	RM-831	UK	SCC-G55A-A

之维
家修

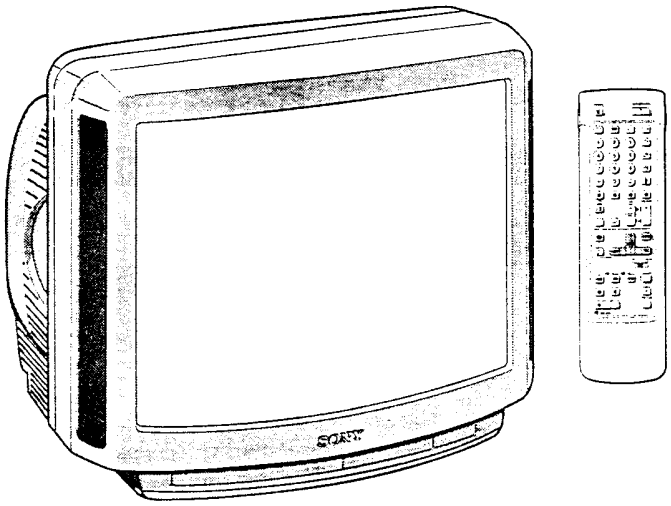

MICROFILM

TRINITRON® COLOR TV

SONY®

ITEM MODEL	Television System	Stereo System	Channel Coverage	Color System
Italian	B/G/H, D/K	GERMAN Stereo	ITALIA VHF:A-H2 (C) UHF: 21-69 PAL B/G/H VHF:E2-E12 UHF:E21-E69 CABLE TV (1):S1-S41 CABLE TV (2):S01-S05, M1-M10, U1-U10 D/K VHF:R01-R12 UHF:R21-R69	PAL, SECAM NTSC4.43, NTSC3.58 (VIDEO IN)
French	B/G/H, D/K L, I	GERMAN Stereo	L VHF:F02-F10 UHF:F21-F60 CABLE:B-Q B/G/H VHF:E2-E12 UHF:E21-E69 CABLE TV (1):S1-S41 CABLE TV (2):S01-S05, M1-M10, U1-U10 ITALIA VHF:A-H2 (C) UHF:21-69 I UHF:B21-B69	PAL, SECAM NTSC4.43, NTSC3.58 (VIDEO IN)
AEP	B/G/H, D/K	GERMAN Stereo	PAL B/G/H VHF:E2-E12 UHF:E21-E69 CABLE TV (1):S1-S41 CABLE TV (2):S01-S05, M1-M10, U1-U10 ITALIA VHF:A-H2 (C) UHF:21-69 D/K VHF:R01-R12 UHF:R21-R69	PAL, SECAM NTSC4.43, NTSC3.58 (VIDEO IN)
Spanish	B/G/H, D/K	GERMAN/NICAM Stereo	PAL B/G VHF:E2-E12 UHF:E21-E69 CABLE TV (1):S1-S41 CABLE TV (2):S01-S05, M1-M10, U1-U10 ITALIA VHF:A-H2 (C) UHF:21-69 D/K VHF:R01-R12 UHF:R21-R69	PAL, SECAM NTSC4.43, NTSC3.58 (VIDEO IN)
OIRT	B/G/H, D/K	GERMAN Stereo	B/G/H VHF:E2-E12 UHF:E21-E69 CABLE TV (1):S1-S41 D/K VHF:R01-R12 UHF:R21-R69	PAL, SECAM NTSC4.43, NTSC3.58 (VIDEO IN)
UK	I	NICAM Stereo	UHF : B21-B69	PAL, SECAM NTSC4.43, NTSC3.58 (VIDEO IN)

MODEL	Italian	French	AEP	Spanish	OIRT	UK
Power Consumption	112W	125W	130Wh	133Wh	130Wh	186W

SPECIFICATIONS

Picture Tube
Super Trinitron
Approx. 72 cm (29 inches)
(Approx. 68 cm picture measured diagonally)
110° -deflection

Input/Output Terminals

[REAR]

1 21-pin Euro connector (CENELEC standard)
- inputs for audio and video signals
- inputs for RGB
- outputs of TV video and audio signals

2/3 2 21-pin Euro connector
- inputs for audio and video signals
- inputs for S video
- outputs for audio and video signals (selectable)

Audio outputs (variable) - phono jacks

[FRONT]

3 Video input - phono jack
Audio inputs - phono jacks
3 S video input 4-pin DIN
Ω Headphone jacks : stereo minijack

Sound output	2 x 12W (RMS) 2 x 30W (Music)
Power requirements	220 - 240V
Dimensions	Approx. 676x557x528 mm
Weight	Approx. 48kg
Supplied accessories	RM-831 Remote Commander (1) IEC designation R6 battery (1)
Other features	NICAM , FASTEXT.

[RM-831]

Remote control system	infrared control
Power requirements	1.5V dc 1 battery IEC designation R6 (size AA)
Dimensions	Approx. 65x225x21 mm (w/h/d)
Weight	Approx. 157g (Not including batteries)

Design and specifications are subject to change without notice.

Item \ Model name	KV-X2971A	KV-X2971B	KV-X2971D	KV-X2973E	KV-X2971K	KV-X2972U
Pal Comb	OFF	OFF	OFF	OFF	OFF	OFF
PIP	OFF	OFF	OFF	OFF	OFF	OFF
RGB Priority	ON	ON	OFF	OFF	OFF	OFF
Woofer Box	OFF	OFF	OFF	OFF	OFF	OFF
Scart 1	ON	ON	ON	ON	ON	ON
Scart 2	ON	ON	ON	ON	ON	ON
Front in (3)	ON	ON	ON	ON	ON	ON
Scart 4	OFF	OFF	OFF	OFF	OFF	OFF
Dyn. Convergence	OFF	OFF	OFF	OFF	OFF	OFF
Projector	OFF	OFF	OFF	OFF	OFF	OFF
AKB in 16:9 mode	ON	ON	ON	ON	ON	ON
Norm B/G	ON	ON	ON	ON	ON	OFF
Norm I	OFF	ON	OFF	OFF	OFF	ON
Norm D/K	ON	ON	ON	ON	ON	OFF
Norm AUS	OFF	OFF	OFF	OFF	OFF	OFF
Norm L	OFF	ON	OFF	OFF	OFF	OFF
Norm SAT	OFF	OFF	OFF	OFF	OFF	OFF
Norm M	OFF	OFF	OFF	OFF	OFF	OFF
Language Preset	Italiano	Francais	Deutsch	None	OIRT	English

WARNING (KV-X2972U only)

The flexible mains lead is supplied connected to a **B.S. 1363** fused plug having a fuse of **5 AMP** capacity. Should the fuse need to be replaced, use a **5 AMP FUSE** approved by **ASTA** to **BS 1362**, ie one that carries the ⟐ mark.
IF THE PLUG SUPPLIED WITH THIS APPLIANCE IS NOT SUITABLE FOR YOUR SOCKET OUTLETS IN YOUR HOME. IT SHOULD BE CUT OFF AND AN APPROPRIATE PLUG FITTED. THE PLUG SEVERED FROM THE MAINS LEAD MUST BE DESTROYED AS A PLUG WITH BARED WIRES IS DANGEROUS IF ENGAGED IN A LIVE SOCKET OUTLET.
When an alternative type of plug is used it should be fitted with a **5 AMP FUSE**, otherwise the circuit should be protected by a **5 AMP FUSE** at the distribution board.

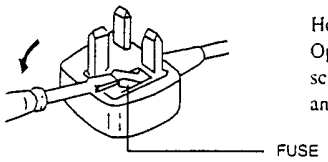

How to replace the fuse.
Open the fuse compartment with the screwdriver blade and replace the fuse.

21 pin connector (1 2 / 4)

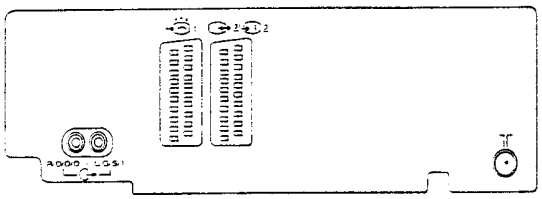

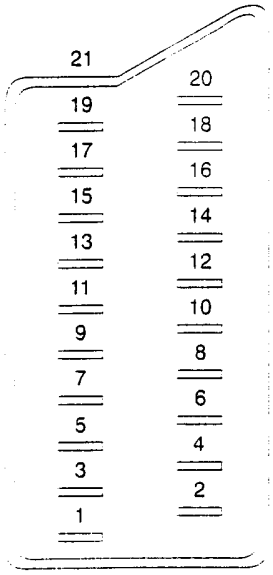

Pin No.	1	2	4	Signal	Signal level
1	○	○	○	Audio output B (right)	Standard level : 0.5V rms Output impedance :Less than 1kohm*
2	○	○	○	Audio input B (right)	Standard level : 0.5V rms Output impedance :More than 10kohm*
3	○	○	○	Audio output A (left)	Standard level : 0.5V rms Output impedance :Less than 1kohm*
4	○	○	○	Ground (audio)	
5	○	○	○	Ground (blue)	
6	○	○	○	Audio input A (left)	Standard level : 0.5V rms Output impedance :More than 10kohm*
7	○	●	●	Blue input	0.7 ± 3dB, 75 ohms, positive
8	○	○	○	Function select (AV control)	High state (9.5 - 12V) : Part mode Low state (0 - 2V) : TV mode Input impedance : More than 10k ohms Input capacitance : Less than 2nF
9	○	○	○	Ground (green)	
10	○	○	○	Open	
11	○	●	●	Green	Green signal : 0.7 ± 3dB, 75 ohms, positive
12	○	○	○	Open	
13	○	○	○	Ground (red)	
14	○	○	○	Ground(blanking)	
15	○	—	—	Red input	0.7 ± 3dB, 75 ohms, positive
	—	○	○	(S signal) croma input	0.3 ± 3dB, 75 ohms, positive
16	○	●	●	Blanking input (Ys signal)	High state (1 - 3V) Low state (0 - 0.4V) Input impedance : 75ohms
17	○	○	○	Ground(video output)	
18	○	○	○	Ground(video input)	
19	○	○	○	Video output	1V ± 3dB,75ohms,positive sync:0.3V(-3+10dB)
20	○	—	—	Video input	1V ± 3dB,75ohms,positive sync:0.3V(-3+10dB)
	—	○	○	Video input Y (S signal)	1V ± 3dB,75ohms,positive sync:0.3V(-3+10dB)
21	○	○	○	Common ground (plug, sheild)	

○ Connected ● Not Connected (open) * at 20Hz - 20kHz

Pin No	Signal	Signal level
1	Ground	
2	Ground	
3	Y (S signal) input	1V ± 3dB 75 ohm , positive Sync. 0.3V -3/+10 dB
4	C (S signal) input	0.3V ± 3dB 75 ohm , positive Sync.

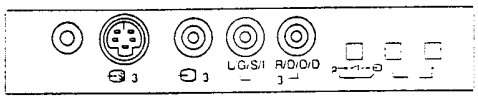

TABLE OF CONTENTS

Section	Title	Page
1. GENERAL		
	Overview	6
	Step 3 - Tuning in to TV stations	7
	Additional Presetting Functions	10
	Watching the TV	13
	Adjusting and Setting the TV Using the Menu	15
	Teletext	17
	Connecting and Operating optional Equipment	20
2. DISASSEMBLY		
2-1.	Rear Cover Removal	22
2-2.	Chassis Assy Removal	22
2-3.	Service Position	23
2-4.	Extension Boards	23
2-5.	M2 and A1 Board Removal	24
2-6.	D4 and D5 Board Removal	24
2-7	J Board Removal	25
2-8.	F Bracket Removal	25
2-9-1.	Wire Dressing	26
2-9-2.	Wire Dressing	26
2-10.	Picture Tube Removal	27
3. SET-UP ADJUSTMENTS		
3-1	Beam Landing	28
3-2.	Convergence	29
3-3.	Focus	31
3-4	White Balance	31
4. CIRCUIT ADJUSTMENTS		
4-1	Electrical Adjustments	32
4-2	Volume Electrical Adjustments	36
4-3.	Test Mode 2	37
4-4.	Error Message	38
4-5.	Error I²C Bus Diagnosis System in AE-2B Chassis	38
5. DIAGRAMS		
5-1.	Block Diagram (1)	39
	Block Diagram (2)	44
5-2.	Circuit Board Location	49
5-3.	Schematic Diagrams and Printed Wiring Boards	50
	* H1 Board	50
	* H2 Board	50
	* F2 Board	50
	* F1 Board	50
	* J Board	54
	* A Board	59
	* M2 Board	66
	* D Board	70
	* A1 Board	74
	* VM Board	74
	* C Board	76
	* D5 Board	77
	* D4 Board	77
	* IF Board	82
5-4.	Schematic Diagram of Tuner	89
5-5.	Semiconductors	90
6. EXPLODED VIEWS		
6-1.	Chassis	92
6-2.	Picture Tube	93
7. ELECTRICAL PARTS LIST		94

CAUTION

SHORT CIRCUIT THE ANODE OF THE PICTURE TUBE AND THE ANODE CAP TO THE METAL CHASSIS, CRT SHIELD, OR CARBON PAINTED ON THE CRT, AFTER REMOVAL OF THE ANODE CAP.

WARNING !!

AN ISOLATING TRANSFORMER SHOULD BE USED DURING ANY SERVICE WORK TO AVOID POSSIBLE SHOCK HAZARD. DUE TO A LIVE CHASSIS. THE CHASSIS OF THIS RECEIVER IS DIRECTLY CONNECTED TO THE AC POWER LINE.

SAFETY-RELATED COMPONENT WARNING !!

COMPONENTS IDENTIFIED BY SHADING AND MARKED ! ON THE SCHEMATIC DIAGRAMS, EXPLODED VIEWS AND IN THE PARTS LIST ARE CRITICAL FOR SAFE OPERATION. REPLACE THESE COMPONENTS WITH SONY PARTS WHOSE PART NUMBERS APPEAR AS SHOWN IN THIS MANUAL OR IN SUPPLIMENTS PUBLISHED BY SONY.

ATTENTION

APRES AVOIR DECONNECTE LE CAP DE L'ANODE, COURT-CIRCUITER L'ANODE DU TUBE CATHODIQUE ET CELUI DE L'ANODE DU CAP AU CHASSIS METALLIQUE DE L'APPAREIL, OU AU COUCHE DE CARBONE PEINTE SUR LE TUBE CATHODIQUE OU AU BLINDAGE DU TUBE CATHODIQUE.

ATTENTION !!

AFIN D'EVITER TOUT RISQUE D'ELECTROCUTION PROVENANT D'UN CHÁSSIS SOUS TENTION, UN TRANSFORMATEUR D'ISOLEMENT DOIT ETRE UTILISÈ LORS DE TOUT DÈPANNAGE. LE CHÁSSIS DE CE RÈCEPTEUR EST DIRECTEMENT RACCORDÈ Á L'ALIMENTATION SECTEUR.

ATTENTION AUX COMPOSANTS RELATIFS Á LA SÈCURITÈ !!

LES COMPOSANTS IDENTIFIÈS PAR UNE TRAME ET PAR UNE MARQUE ! SUR LES SCHÈMAS DE PRINCIPE, LES VUES EXPLOSÈES ET LES LISTES DE PIECES SONT D'UNE IMPORTANCE CRITIQUE POUR LA SÈCURITÈ DU FONCTIONNEMENT, NE LES REMPLACER QUE PAR DES COMPOSANTS SONY DONT LE NUMÈRO DE PIÈCE EST INDIQUÈ DANS LE PRÈSENT MANUEL OU DANS DES SUPPLÈMENTS PUBLIÈS PAR SONY.

SECTION 1
GENERAL

The operating instructions mentioned here are partial abstracts from the Operating Instruction Manual. The page numbers of the Operating Instruction Manual remein as in the manual.

Overview

This section briefly describes the buttons and controls on the TV set and on the Remote Commander. For more information, refer to the pages given next to each description.

TV set - front

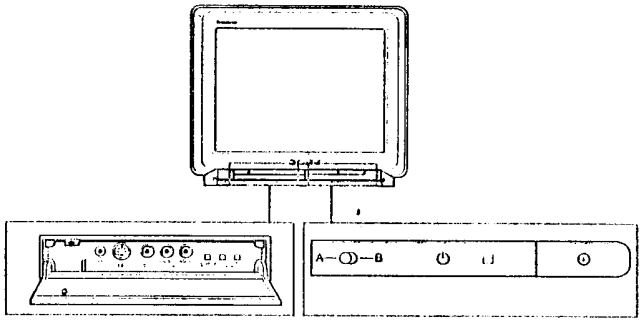

Symbol	Name	Refer to page
⏻	Main power switch	13
⏻	Standby indicator	13
A-B	Stereo A/B indicators	15
🎧	Headphones jack	20
S3, 3, 3	Input jacks (S-video/video/audio)	20
P-◿-⊙	Function selector (Programme/volume/input)	13
– +	Adjustment buttons for function selector	13

Remote Commander RM-831

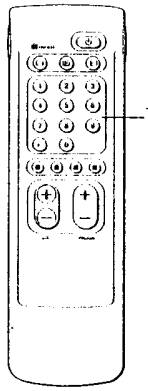

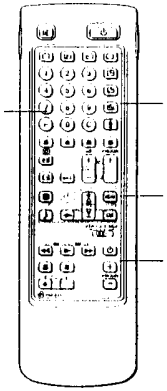

Note
The SAT button does not operate with this TV.

Simple side

Full-Function side

TV/Teletext operation

Symbol	Name	Refer to Page
🔇	Mute on/off button	14
⏻	Standby button	13
▢	TV power on/TV mode selector button	13
▤	Teletext button	14
⊙	Input mode selector	14
⊙→	Output mode selector	21
1,2,3,4,5,6, 7,8,9, and 0	Number buttons	13
–/– –	Double-digit entering button	13
C	Direct channel entering button	10
◿+/–	Volume control button	13
PROGR +/–	Programme selectors	13
▤▤	Teletext page access buttons	17
●	Picture adjustment button	15
♪	Sound adjustment button	15
⊙	On-screen display button	14
⊕	Teletext hold button	17
⊙	Time display button	14
■■■■	Fastext buttons	17

Menu operation

Symbol	Name	Refer to Page
MENU	Menu on / off button	7
∧+/∨–	Select buttons	7
OK	OK (confirming) button	7
←	Back button	7

Video operation

Symbol	Name	Refer to Page
VTR1/2/3 MDP	Video equipment selector	22
◀◀ ▶ ▶▶ ■ ❚❚ ● ⏻ PROGR +/–	Video equipment operation buttons	22

Step 3 Tuning in to TV Stations

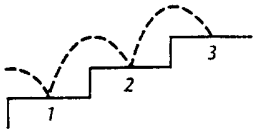

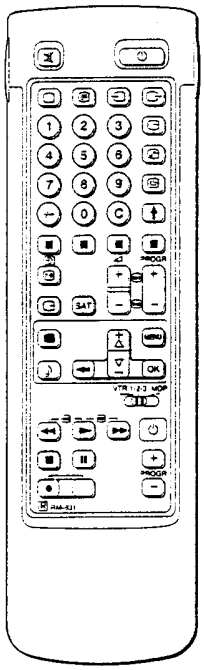

Once you have set up the TV, you can choose the language of the menu. Then you should preset the channels (up to 60 channels) by choosing either the automatic or manual method.

The automatic method is easier if you want to preset all receivable channels at once. Use the manual method if you only have a few channels and want to preset channels one by one. The manual method is also convenient for allocating programme numbers to various video input sources.

Before you begin

- Check that the Full-Function side of the Remote Commander is visible.
- Locate Menu operation buttons on the Remote Commander. They are shaded in the illustration at the left.

❶ Choose a language

1 Depress ⏻ on the TV.
The TV will switch on. If the standby indicator on the TV is lit, press ⏻ or a number button on the Remote Commander.

2 Press the MENU button.
The LANGUAGE menu appears. (See Fig. 1)

3 Select the language you want with △+ or ▽–, and then press OK.

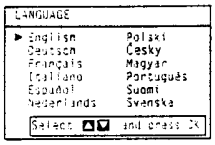

Fig. 1.

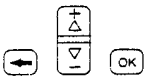

❷ Display the Menu

Press the ← button.
The main menu appears. (See Fig. 2)

Now, choose one of the methods described overleaf:

"Preset Channels Automatically"

or

"Preset Channels Manually".

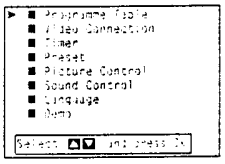

Fig. 2.

It is recommended to choose

"Preset Channels Automatically".

Then the channels are automatically stored as follows;

Programme 1	–	BBC1
Programme 2	–	BBC2
Programme 3	–	ITV
Programme 4	–	CH4 or S4C

To go back to main menu:
Keep pressing ←.

To go back to the normal TV picture:
Press MENU. Normal TV picture will be restored after one minute if menu functions are not selected.

Note on the Demo function:
If you choose Demo on the main menu, you can see a sequential demonstration of the menu functions. Press MENU to stop the function.

With this method, you can preset all receivable channels at once.

To stop automatic channel presetting:
Press ← on the Remote Commander.

Notes:
• After presetting the channels automatically, you can check which channels are stored on which programme positions. For details, see "Using the Programme Table" on page 16.

• You can sort the programme positions to have them appear on screen in the order you like. For details, see "Sorting Programme Positions" on page 10.

• Programme names are automatically taken from Teletext if available. If not please refer to page 11 "Captioning a station name" for further information.

❸ Preset channels automatically

1 Select Preset with △+ or ▽– and press OK.
The PRESET menu appears. (See Fig. 3.)

2 Select Auto Programme with △+ or ▽– and press OK.
The AUTO PROGRAMME menu appears. (See Fig. 4.)

3 Press OK repeatedly until the first element of the "PROG" number is highlighted.

4 Select the programme (number button) from which you want to start presetting. Select the first element of the double-digit number with △+ or ▽– or the number buttons (e.g. For "04", select "0" here) and press OK.
The second element of "PROG" will be highlighted.

5 Select the second element of the double-digit number with △+ or ▽– or the number buttons (e.g. For "04", select "4" here) (See Fig. 5.) and press OK.

6 The automatic channel presetting starts.
When presetting is finished, the preset menu reappears. All available channels are now stored on successive number buttons. (Press MENU to restore normal TV picture).

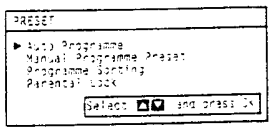

Fig. 3.

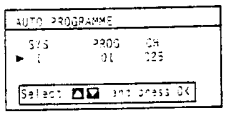

Fig. 4.

Fig. 5.

Use this method if there are only a few channels in your area to preset or if you want to preset channels one by one. You may also allocate programme numbers to various video input sources.

If you have made a mistake:
Press ← to go back to the previous position.
To go back to main menu
Keep pressing ←.
To go back to the normal TV picture
Press MENU.

❸ Preset channels manually

1 Select Preset with △+ or ▽– and press OK.
The PRESET menu appears. (See Fig. 6.)

2 Select Manual Programme Preset with △+ or ▽– and press OK.
The MANUAL PROGRAMME PRESET menu appears. (See Fig. 7.)

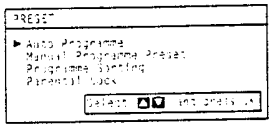

Fig. 6.

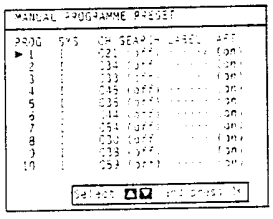

Fig. 7.

3 Using △+ or ▽–, select the programme position (number button) to which you want to preset a channel, and press OK.

4 Keep pressing ▽– to select programme numbers higher than 10.

5 Select, if necessary, a video input source (EXT) with △+ or ▽–. Then press OK. The first element of the CH position will be highlighted. (See Fig. 8.)

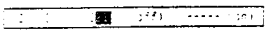

Fig.8.

To tune in a channel by frequency:
After selecting F in step 6, enter three digits using the number buttons.
Press OK.

6 Using △+ or ▽–, select C (to preset a regular channel), or F (to tune in by frequency) and press OK.
The first element of the "CH" number will be highlighted.
If you have selected EXT in step 5, select the video input source with △+ or ▽–. (See Fig. 9.)

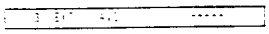

Fig.9.

Please refer to "Television Channel Number Guide" on page 24.

There are two ways to preset channels. If you know the channel number, go to step "7-Manual",

or

if you don't know the channel number, go to step "7- Search".

7 *Manual*

-a Select the first element of the "CH" number with △+ / ▽– or the number buttons and press OK.
The second element of the "CH" number will be highlighted.

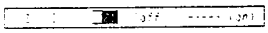

Fig.10.

-b Select the second element of the number with △+ / ▽– or the number buttons.
The selected number appears. (See Fig. 10.)

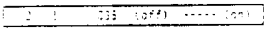

Fig.11.

-c Press OK
The "SEARCH" position is highlighted and the selected channel is now stored. (See Fig. 11.)

-d Press OK until the cursor appears by the next programme position.

-e Repeat steps 3 to 7 to preset other channels.

If you have made a mistake:
Press ← to go back to the previous position.
To go back to main menu
Keep pressing ←.
To go back to the normal TV picture
Press MENU.

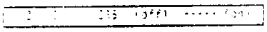

Fig.12.

7 *Search*

-a Press OK repeatedly until the colour of the SEARCH position changes.

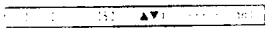

Fig.13.

-b Start searching for the channel with △+ (up) or ▽– (down).
The CH position changes colour. (See Fig. 12.)
The CH number starts counting up or downwards. When a channel is found, it stops. (See Fig. 13.)

-c Press OK if you want to store this channel. If not, press △+ or ▽– to continue channel searching.

-d Press OK until the cursor appears by the next programme position.

-e Repeat steps 3 to 7 to preset other channels.

Additional Presetting Functions

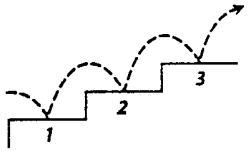

This section shows you additional presetting functions such as sorting or skipping programme positions, captioning a station name, manual fine-tuning, and using the parental lock.

Before you begin

- Check that the Full Function side of the Remote Commander is visible
- Locate the Menu operation buttons.

PROGRAMME SORTING

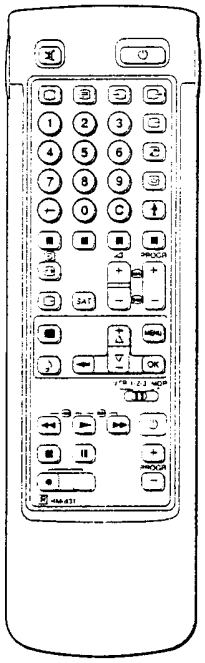

Sorting Programme Positions

With this function, you can sort the programme positions to a preferable order.

1 Press MENU to display the main menu.

2 Select Preset with △+ or ▽– and press OK.
The PRESET menu appears.

3 Select Programme Sorting with △+ or ▽– and press OK.
The PROGRAMME SORTING menu appears. (See Fig. 14.)

4 Using △+ or ▽–, select the programme position you want to move to another programme position and press OK.
The colour of the selected position changes. (See Fig. 15.)

5 Using △+ or ▽–, select the programme position to which you want to move the selected programme and press OK. Now the two programme positions have been sorted. (See Fig. 16.)

6 Repeat steps 4 and 5 to exchange other programme positions.

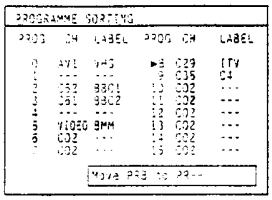

Fig. 14.

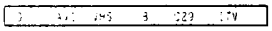

Fig. 15.

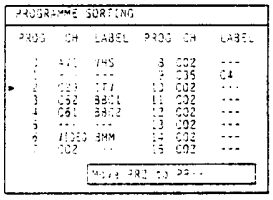

Fig. 16.

For higher programme positions:
The display scrolls automatically.

If you have made a mistake:
Press ← to go back to the previous position.

To go back to main menu:
Keep pressing ←.

To go back to the normal TV picture:
Press MENU.

Tuning in a Channel Temporarily

You can tune in a channel temporarily, even when it has not been preset. Use the buttons on the Full-Function side of the Remote Commander.

1 Press C on the Remote Commander.
The indication "C" appears on the screen.

2 Enter the double-digit channel number using the number buttons (e.g. for channel 4, first press 0, then 4).
The channel appears.
However, the channel will not be stored.

MANUAL PROGRAMME PRESET

Skipping Programme Positions

You can skip unused programme positions when selecting programmes with the PROGR +/- buttons. However, the skipped programmes may still be called up when you use the number buttons.

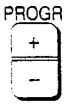

1 Press MENU to display the main menu.

2 Select Preset with △+ or ▽– and press OK.
The PRESET menu appears.

3 Select Manual Programme Preset with △+ or ▽– and press OK.
The MANUAL PROGRAMME PRESET menu appears. (See Fig.17.)

4 Using △+ or ▽–, select the programme position which you want to skip and press OK.
The "SYSTEM" position changes colour.

5 Press △+ or ▽– until – – – appears in the SYSTEM position. (See Fig. 18.)

6 Press OK. (See Fig. 19.)
When you select programmes using the PROGR +/– buttons, the programme position will be skipped.

7 Repeat steps 4 to 6 to skip other programme positions.

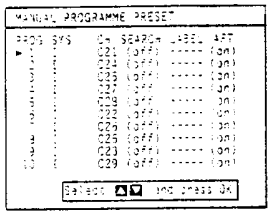

Fig. 17.

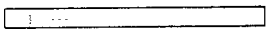

Fig. 18.

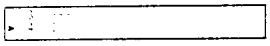

Fig. 19.

MANUAL PROGRAMME PRESET

Captioning a Station Name

Programme names are automatically taken from Teletext if available. However you can also "name" a channel or an input video source using up to five characters (letters or numbers) to be displayed on the TV screen (e.g. BBC1). Using this function, you can easily identify which channel or video source you are watching.

1 Press MENU to display the main menu.

2 Select Preset with △+ or ▽– and press OK.
The PRESET menu appears.

3 Select Manual Programme Preset with △+ or ▽– and press OK.
The MANUAL PROGRAMME PRESET menu appears. (See Fig. 20.)

4 Using △+ or ▽–, select the programme position you want to caption and press OK repeatedly until the first element of the LABEL position is highlighted.

5 Select a letter or number with △+ or ▽– and press OK.The next element will be highlighted.
Select other characters in the same way. If you want to leave an element blank, select – and press OK. (See Fig. 21.)

6 After selecting all the characters, press OK repeatedly until the cursor appears by the next programme position (at the left margin). Now the caption you chose is stored. (See Fig. 22.)

7 Repeat steps 5 and 6 to caption names for other channels.

If you have made a mistake:
Press ← to go back to the previous position.

To go back to main menu:
Keep pressing ←.

To go back to the normal TV picture:
Press MENU.

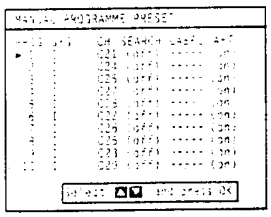

Fig. 20.

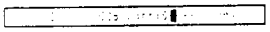

Fig. 21.

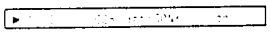

Fig. 22.

MANUAL PROGRAMME PRESET

Manual Fine-Tuning

Normally, the AFT(automatic fine-tuning) is already operating. However, if the picture is distorted, you can use the manual fine tuning function to obtain better picture reception.

1 Press MENU to display the main menu.

2 Select Preset with △+ or ▽− and press OK.
The PRESET menu appears.

3 Select Manual Programme Preset with △+ or ▽− and press OK.
The MANUAL PROGRAMME PRESET menu appears. (See Fig. 23.)

4 Using △+ or ▽−, select the programme position corresponding to the channel which you want to manually fine-tune, and press OK repeatedly until the AFT position changes colour.

5 Fine-tune the channel with △+ or ▽− so that you get the best TV reception. As you press the cursor buttons, the frequency changes from −15 to +15. (See Fig. 24.)

6 After fine tuning, press OK.
The cursor appears beside the next programme position (at the left margin). (See Fig. 25.) Now the fine-tuned level is stored.

7 Repeat steps 4 to 6 to fine-tune other channels.

To reactivate AFT (automatic fine tuning):
Repeat from the beginning and select "ON" in step 5.

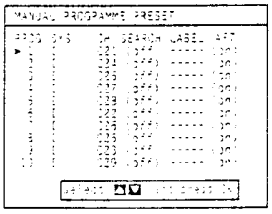

Fig. 23.

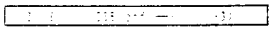

Fig. 24.

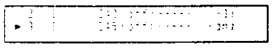

Fig. 25.

PARENTAL LOCK

Parental Lock

You can prevent undesirable broadcasts from appearing on the screen. We suggest you use this function to prevent children from watching programmes which you consider unsuitable.

1 Press MENU to display the main menu.

2 Select Preset with △+ or ▽− and press OK.
The PRESET menu appears.

3 Select Parental Lock with △+ or ▽− and press OK.
The PARENTAL LOCK menu appears. (See Fig. 26.)

4 Using △+ or ▽−, select the programme position you want to block and press OK.
The CH and LABEL, of the selected programme number, change colour indicating that this programme is now blocked.
(See Fig. 27.)

5 Repeat step 4 to block other programme positions.

If you try to select a programme that has been blocked:
The message "LOCKED" appears on the blank TV screen.

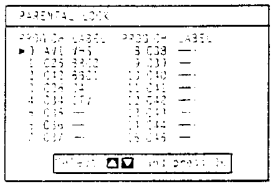

Fig. 26.

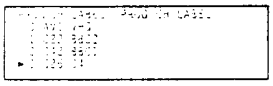

Fig. 27.

Cancelling blocking

1 On the PARENTAL LOCK menu, select the programme position you want to unblock with △+ or ▽−.

2 Press OK.
The CH and LABEL change to normal colour indicating that the blocking has been cancelled.

Watching the TV

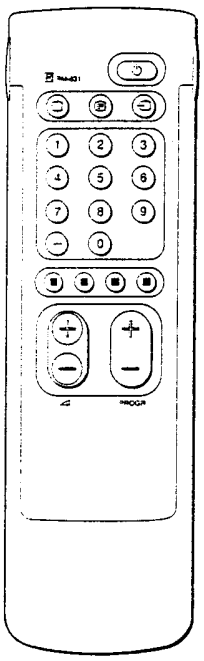

If no picture appears when you depress ⏻ on the TV

and if the standby indicator on the TV is lit, the TV is in standby mode. Press ⏻ or one of the number buttons to switch it on.

This section explains the basic functions you use while watching TV. Most of the operations can be done using the simple side of the Remote Commander.

Switching the TV on and off

Switching on

Depress ⏻ on the TV.

Switching off temporarily

Press ⏻ on the Remote Commander.
The TV enters standby mode and the standby indicator on the front of the TV lights up.

To switch on again

Press ⏻, PROGR +/–, or one of the number buttons on the Remote Commander.

Switching off completely

Depress ⏻ on the TV.

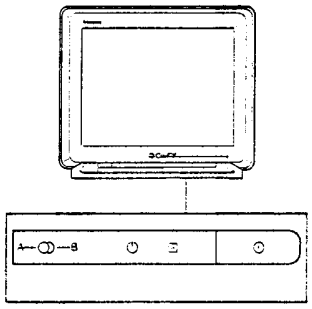

Selecting TV Programmes

Press PROGR +/– or press number buttons.

To select a double-digit number

Press –/– –, then the numbers.
For example, if you want to choose 23, press –/– –, 2, and 3.

Adjusting the Volume

Press ◿ +/–.

Operating the TV Using the Buttons on the TV

With the buttons on the TV, you can select programmes, adjust the volume, and select video input sources.

- Press P/◿/⊖ button repeatedly until the programme number, ◿ (for volume), or ⊖ (for video input picture) appears. Then adjust with the –/+ buttons.
- Press –/+ buttons to switch on the TV from the standby mode.
- Press –/+ simultaneously to reset picture and sound controls to the factory preset level (RESET symbol →•← is displayed).

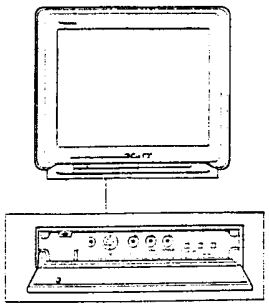

For details of the teletext operation, refer to page 17.

For details of the video input picture, refer to page 21.

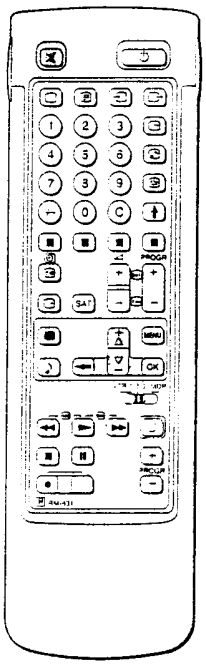

To make the Programme Table disappear
Press MENU.

Watching Teletext or Video Input

Watching teletext

- Press ⊜ to view the teletext.
- Press three number buttons to select a page.
- Press one of the coloured buttons for fastext operation.
- Press ⊜ (PAGE +) or ⊜ (PAGE –) for the next or preceeding page.
- To go back to the normal TV picture, press ▢.

Watching a video input picture

Press ⊖ repeatedly until the desired video input appears. To go back to the normal TV picture, press ▢.

More Convenient Functions

Use the Full-Function side of the Remote Commander.

Displaying the on screen indications

- Press ⊖ once to display all the indications. They will disappear after some seconds.
- Press ⊖ twice to have the programme number and label stay on screen. Press twice again to make indications disappear.

Muting the sound.

Press 🔇.
To resume normal sound, press 🔇 again.

Displaying the time

Press ⊙. This function is available only when teletext is broadcast.
To make the time display disappear, press ⊙ again.

Displaying of the Programme Table

Press OK. A Programme Table will be displayed on the right side of the TV screen (See. Fig.28)

Selecting of TV programmes

Press PROGR +/- or select the desired programme position using △+ or ▽– and press OK.

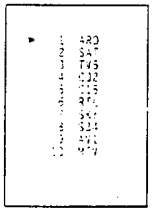

Fig.28.

Adjusting and Setting the TV Using the Menu

PICTURE CONTROL

SOUND CONTROL

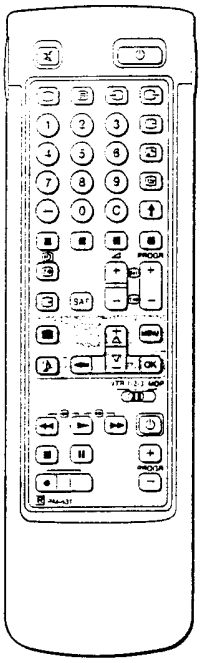

Adjusting the Picture and Sound

Although the picture and sound are adjusted at the factory, you can adjust them to suit your own taste. In addition, you can change the aspect ratio of the TV display for wide screen effect. You can also select dual sound (bilingual) programmes when available or adjust the sound for listening with the headphones (🎧).

1 Press ■ (for picture) or ♪ (for sound) on the Remote Commander.

or

Press MENU and select Picture Control or Sound Control, then press OK.
The PICTURE CONTROL or SOUND CONTROL menu appears. (See Fig. 29 or Fig. 30)

2 Using △+ or ▽−, select the item you want to adjust and press OK.The selected item changes colour. (See Fig. 31)

3 Adjust the setting with △+ or ▽ − and press OK.
The cursor appears beside the next item (at the left margin). (See Fig. 32)
For the effect of each control, see the table below.

4 Repeat steps 2 and 3 to adjust other items.

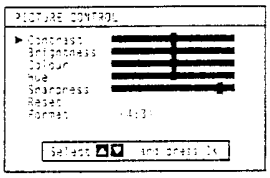

Fig. 29.

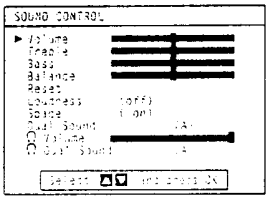

Fig. 30.

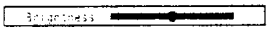

Fig. 31.

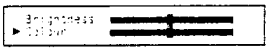

Fig. 32.

If you have made a mistake:
Press ← to go back to the previous position.
To go back to the main menu:
Keep pressing ←.
To go back to the normal TV picture:
Press MENU.

Note:
HUE is only available for NTSC colour system.

Note on LINE OUT:
The audio level and the dual sound mode output from the G- jack on the rear correspond to the HEADPHONES VOLUME and DUAL SOUND settings.

When watching a video input source with stereo sound:
You can select DUAL SOUND to change the sound.

Effect of each control

PICTURE CONTROL	Effect
Contrast	Less —I— More
Brightness	Darker —I— Brighter
Colour	Less —I— More
Hue	Greenish —I— Reddish
Sharpness	Softer —I— Sharper
Reset	Resets picture to the factory preset levels.
Format	4 : 3 : Normal 16 : 9 : Wide screen effect

SOUND CONTROL	Effect
Volume	Less —I— More
Treble	Less —I— More
Bass	Less —I— More
Balance	More left —I— More right
Reset	Resets sound to the factory preset levels.
Loudness	off : Normal on : When listening to low volume sound.
Space	off : Normal on : Obtain acoustic sound effect.
Dual Sound	A : left channel B : right channel stereo mono The selected mode of the A-CD-B indicator on the TV lights up. (for NICAM broadcasts see next page)
Headphones:	
🎧 Volume	Less —I— More
🎧 Dual Sound	A : left channel B : right channel STEREO MONO

*Selecting Nicam Broadcasts**

This Sony TV has been designed to select Nicam broadcasts when available. Whenever a Nicam broadcast is received, "NICAM" appears briefly on the screen. When the Nicam programme ends, or you switch channels to one without Nicam, the A-CD-B indicators, on the TV will switch off.

Nicam programmes can be broadcast in two ways. You may select the sound you want to hear in either of these by first following the instructions explained on page 15.

Service Being Broadcast	Action	Effect	Indication on the TV A-CD-B	
Stereo	Press △+ or ▽–	Stereo Nicam (Mono 2-Channel)	▬	▬
		mono	▭	▭
Press △+ or ▽– again to return to stereo Nicam (mono 2-channel)				
Bilingual	press △+ or ▽–	Channel A Nicam	▬	▭
		Channel B Nicam	▭	▬
		mono	▭	▭
Press △+ or ▽– again to return to channel A Nicam				

* Depending on availability of service.

PROGRAMME TABLE

To go back to the normal TV picture:
Press MENU.

Using the Programme Table

On this table, you can see which channel is preset to which programme position. You can also select programmes using this table.

1 From the main menu, select Programme Table with △+ or ▽– and press OK.
The PROGRAMME TABLE menu appears. (See Fig. 33)
To scroll to higher programme numbers, press ▽–.

2 To select a programme using this menu select the programme number with △+ or ▽– and press OK.
The selected programme appears.

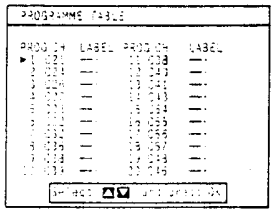

Fig. 33.

TIMER

To switch off the timer:
Select "OFF" in step 3.

To check the remaining time:
Press ⊖.

Using the Sleep Timer

You can select a time period after which the TV automatically switches into standby mode.

1 From the main menu, select Timer with △+ or ▽– and press OK.
The TIMER menu appears. (See Fig. 34.)

2 Press OK.
The time period option changes colour.

3 Select the time period with △+ or ▽–.
The time period (in minutes) changes as follows:
10→20→30→40→50→60→70→80→90
↑ OFF ↓

4 After selecting the time period, press OK.
The cursor moves back to the left margin and the timer starts counting.
One minute before the TV switches into standby mode, a message is displayed on the screen.

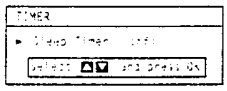

Fig. 34.

Teletext

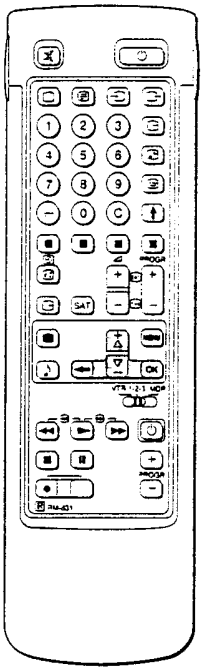

TV stations broadcast an information service called Teletext via the TV channels. Teletext service allows you to receive various information pages such as weather reports or news at any time you want. For advanced teletext operation, use the buttons on the Full-Function side of the Remote Commander.

Direct Access Functions

Switching Teletext on and off

1 Select the TV channel which carries the teletext broadcast you want to watch.

2 Press ⊜ to switch on teletext.
A teletext page will be displayed (usually the index page).If there is no teletext broadcast, "No text available" is displayed on the informa-tion line at the top of the screen.

To switch teletext off
Press ▢.

Selecting a teletext page

With direct page selection

Use the number buttons to input the three digits of the chosen page number.
If you have made a mistake, type in any three digits. Then re-enter the correct page number.

With page-catching

1 Select a teletext page with a page overview (e.g. index page).

2 Press OK. Using △+ or ▽–, select the desired page. "Page Catching" will be displayed on the information line. Press OK. The requested page will appear in a few seconds.

Press ⊜ to resume normal teletext reception.

Accessing next or preceding page

Press ⊜ (PAGE +) or ⊜ (PAGE –).
The next or preceding page appears.

Superimposing the teletext display on the TV programme

- Press ⊜ once in teletext mode or twice in TV mode.
- Press ⊜ again to resume normal teletext reception.

Preventing a teletext page from being updated

- Press ⊜ (HOLD). The HOLD symbol "⊜" is displayed on the information line.
- Press ⊜ to resume normal teletext reception.

Using Fastext

With Fastext you can access pages with one key stroke.When a Fastext page is broadcast, a colour-coded menu will appear at the bottom of the screen. The colours of this menu correspond to the red, green, yellow and blue buttons on the Remote Commander.
Press the corresponding coloured button on the Remote Commander which corresponds to the colour-coded menu. The page will be displayed after some seconds.

Note:
Teletext errors may occur if the broadcasting signals are weak.

With the simple side of the Remote Commander:
You can switch teletext on and off, operate Fastext, and directly select page numbers.

Note:
Fastext operation is only possible, if the TV station broadcasts Fastext signals.

Using the Teletext Menu

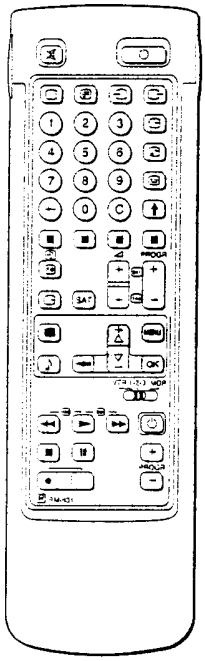

This TV is provided with a menu-guided teletext system. When teletext is switched on, you can use the menu buttons to operate the teletext menu. Select the teletext menu functions in the following way:

1 Press MENU. The menu will be superimposed on the teletext display. (See Fig. 35)

2 Using △+ or ▽–, select the teletext function you want and press OK. (See Fig. 36)

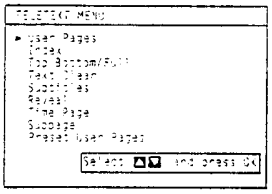

Fig. 35.

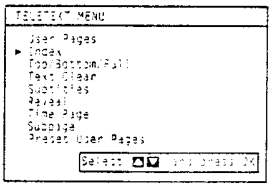

Fig. 36.

USER PAGES/PRESET USER PAGES

See page 19 for information about presetting and operating the user pages.

INDEX

The index will give you an overview of the contents of the teletext and the page numbers.

TOP/BOTTOM/FULL

For convenient reading of a teletext page, you can enlarge the teletext display with the ability to scroll up and down the screen. After having selected the function, an information line Top/Bottom/Full will be displayed. (See Fig. 37)

Press △+ for Top to enlarge the upper half. For Bottom keep pressing ▽–, to enlarge the lower half. Press OK for Full to resume the normal size.

Press ⊜ to resume normal teletext reception.

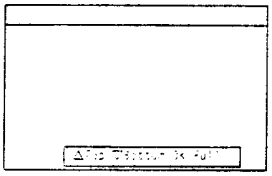

Fig. 37.

TEXT CLEAR

After having selected the function, you can watch a TV programme while waiting for a requested teletext page to be captured (The symbol changes colour) (see Fig. 38).

Press ⊜ to view the requested page.

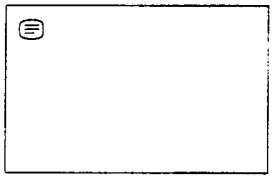

Fig. 38.

SUBTITLES

Your teletext service will inform you if a TV programme is subtitled. After having selected the function the subtitles will be displayed.

REVEAL

Sometimes pages contain concealed information, such as answers to a quiz. The reveal option lets you disclose the information. After having selected the function, an information line "REVEAL ON/OFF" will be displayed. (See Fig. 39)

Using △+ or ▽–, select ON to reveal the information or OFF to conceal it again.

Press ⊜ to resume normal teletext reception.

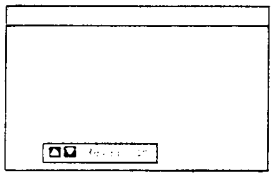

Fig. 39.

TIME PAGE

This function is not available.

SUBPAGE

You may want to select a particular teletext page from several subpages which are rotated automatically. After having selected the function, an information line will be displayed.

To select the desired subpage, enter four digits using PROGR+/– or the number buttons. (e.g. enter 0002 for the second page of a sequence).

Note:
Some of the features may not be available depending on the Teletext service.

Note on Subtitles:
If the subtitles are not broadcast on page 888, please select the subtitle page using the number buttons.

To cancel the request:
Select "Subpage" and press OK.

If two broadcasting stations use the same Teletext:
You can preset one bank to 2 different programme positions.

User Page Bank System

You can store up to 30 pages in the "Teletext page bank system". In this way you have quick access to the pages you watch frequently.

Storing pages

There are 5 "banks" (A to E) for 5 teletext stations. In each bank you can store 6 preferred pages (P1 to P6).

1 Press ⊜ (if Teletext is not on already) and MENU to show the TELETEXT MENU display.

2 Select PRESET USER PAGES with △+ or ▽– and press OK.

3 Select the desired bank with △+ or ▽– and press OK. The cursor will go to the first position (P1) of the preferred pages.

4 Input the three digits of your first preferred page with the number buttons and press OK.
The cursor will go to the second position.

5 Repeat step 4 for the other 5 page numbers you want to preset. If you do not want to preset all 6 page numbers available, press OK without inserting any number. After having finished the presetting press OK repeatedly until the cursor appears besides the next bank at the left margin.

6 Select Allocate Bank with △+ or ▽– and press OK.

7 Select the programme position for which you have preset pages with △+ or ▽– and press OK. (See Fig. 40)

8 Select the desired bank with △+ or ▽– (Banks A to E are available) and press OK.

9 Repeat steps 3 to 8 for the other 4 banks available.

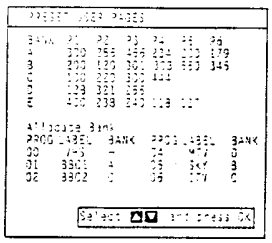

Fig.40.

Displaying User Pages

1 Select MENU.

2 Select User Pages with △+ or ▽– and press OK.
A table of the stored preferred pages will be displayed.
(See Fig. 41)

3 Select the desired page with △+ or ▽– and press OK. The page will be displayed after some seconds.

You can use the coloured buttons on the Remote Commander to have quick access to the first four User pages. Page 1 corresponds to the red button, P 2 to the green one, P 3 to the yellow one and P 4 to the blue button.

To select the desired page press the respective coloured button while you are in TV mode. Now the Page number of this teletext page will appear in white at the top in the left-handed corner of the TV screen. When the page number changes colour, the page is available. Press the coloured button again to display the page.

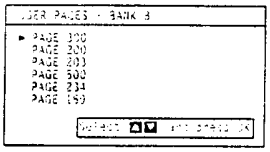

Fig. 41.

Connecting and Operating Optional Equipment

Connecting Optional Equipment

You can connect optional audio-video equipment to this TV such as VTRs, video disc players, and stereo systems.

To connect a VTR using the terminal:
Connect the aerial output of the VTR to the aerial terminal of the TV.

We recommend that you tune in the signal to programme number "0". For details see "Preset Channels Manually" on page 8.

If the picture or the sound is distorted:
Move the VTR away from the TV.

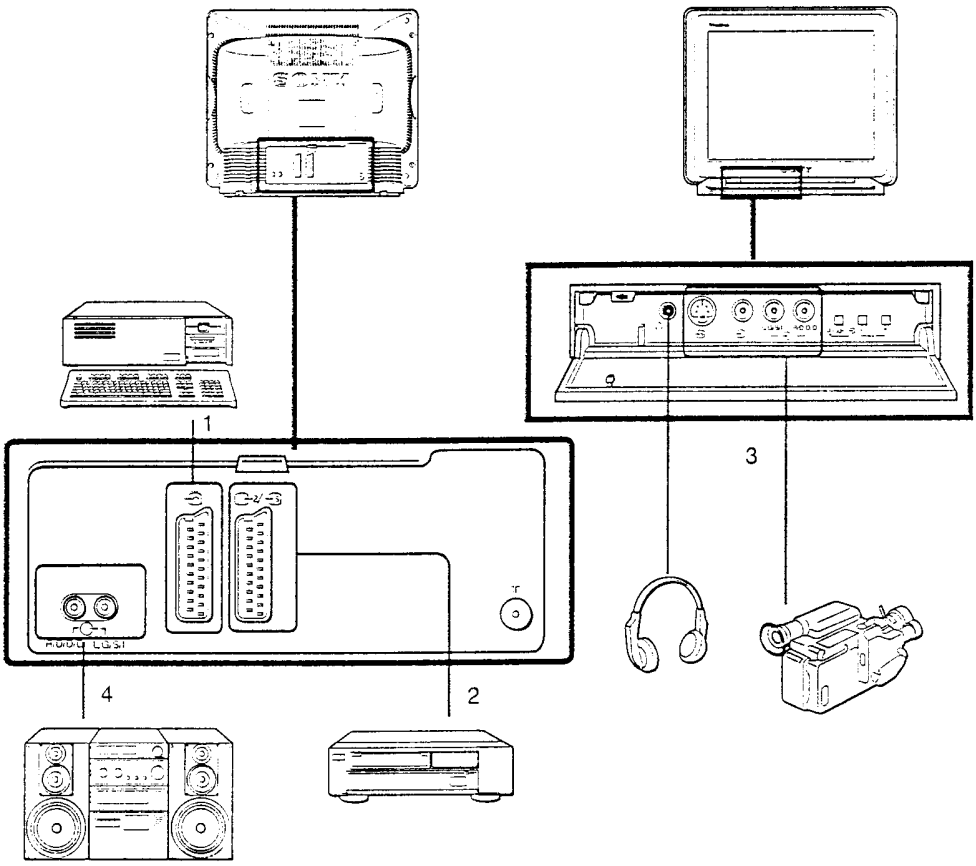

S video input (Y/C input):
Video signals may be separated into Y (luminance or brightness) and C (chrominance) signals. Separating the Y and C signals prevents them from interfering with one another, and therefore improves picture quality (especially luminance). This TV is equipped with 2 S Video input jacks through which these separated signals can be input directly.

When connecting a monaural VTR:
Connect only the white jack to both the TV and VTR.

Acceptable input signal	Available output signal
1 Normal audio/video and RGB signal	Video/audio from TV tuner
2 Normal audio/video and S video signal	Video/audio from selected source
3 Normal audio/video and S video signal	No outputs
4 No inputs	Audio signal (variable)

Checking and selecting the input and output sources using the menu

You can display the menu to see which input sources are selected for the TV screen, and which output source is selected. You can also select them on the menu display.

1 Select Video Connection with △+ or ▽– and press OK. The VIDEO CONNECTION menu appears. (See Fig. 42)

You can see which source is selected for the TV and for the output. If you want to select the input and output on this menu, go on to the next step.

2 Select TV Screen (input source for the TV screen) or output (output source) with △+ or ▽– and press OK. One of the source items changes colour. (See Fig. 43)

3 Select the desired source with △+ or ▽–.
(See Fig. 44)
For details about each source, see the table on page 21.

4 Press OK.

The selected source is confirmed, and the cursor appears. (See Fig. 45)

5 Repeat steps 2 to 4 to select the source for other inputs or outputs.

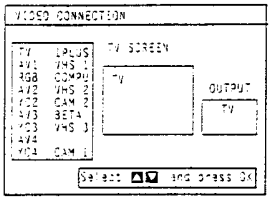

Fig. 42.

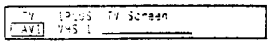
Fig. 43.

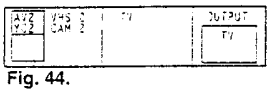
Fig. 44.

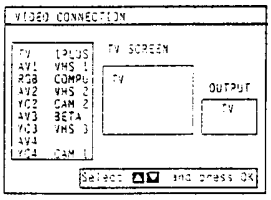

Fig. 45.

Remote Control of Other Sony Equipment

You can use the TV Remote Commander to control most Sony remote-controlled video equipment such as: Beta, 8mm or VHS VTRs or video disc players.

Tuning the Remote Commander to the equipment

1 Set the VTR 1/2/3 MDP selector according to the equipment you want to control:

VTR 1: Beta or ED Beta VTR

VTR 2: 8mm VTR

VTR 3: VHS VTR

MDP: Video disc player

2 Use the buttons indicated in the illustration to operate the additional equipment.

If your video equipment is furnished with a COMMAND MODE selector: set this selector to the same position as the VTR 1/2/3 MDP selector on the TV Remote Commander.

If the equipment does not have a certain function, the corresponding button on the Remote Commander will not operate.

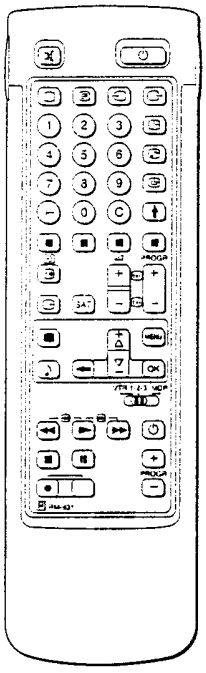

When recording
When you use the ● (record) button, make sure to press this button and the one to the right of it simultaneously.

SECTION 2
DISASSEMBLY

2-1. REAR COVER REMOVAL

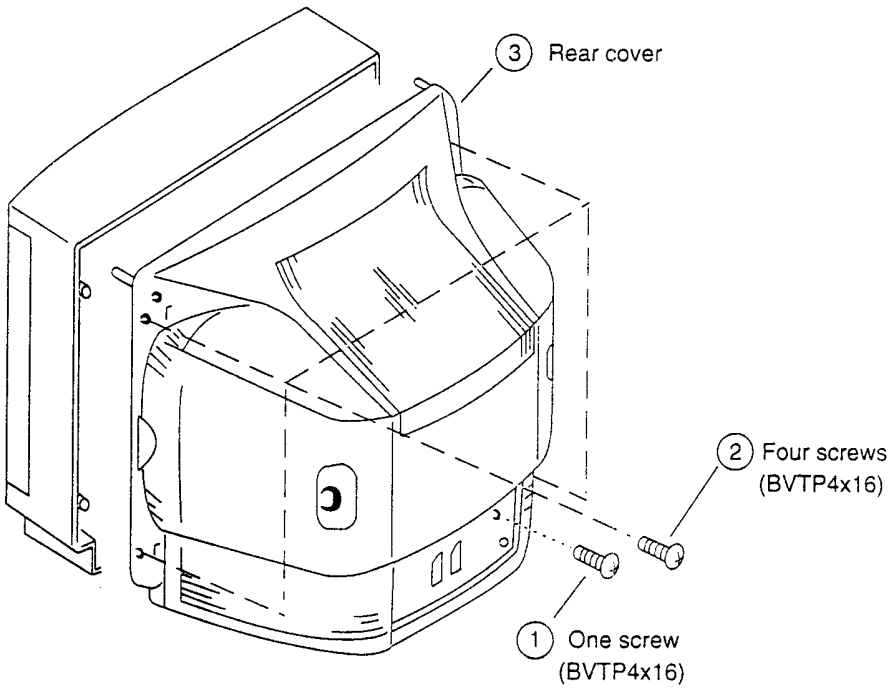

2-2. CHASSIS ASSY REMOVAL

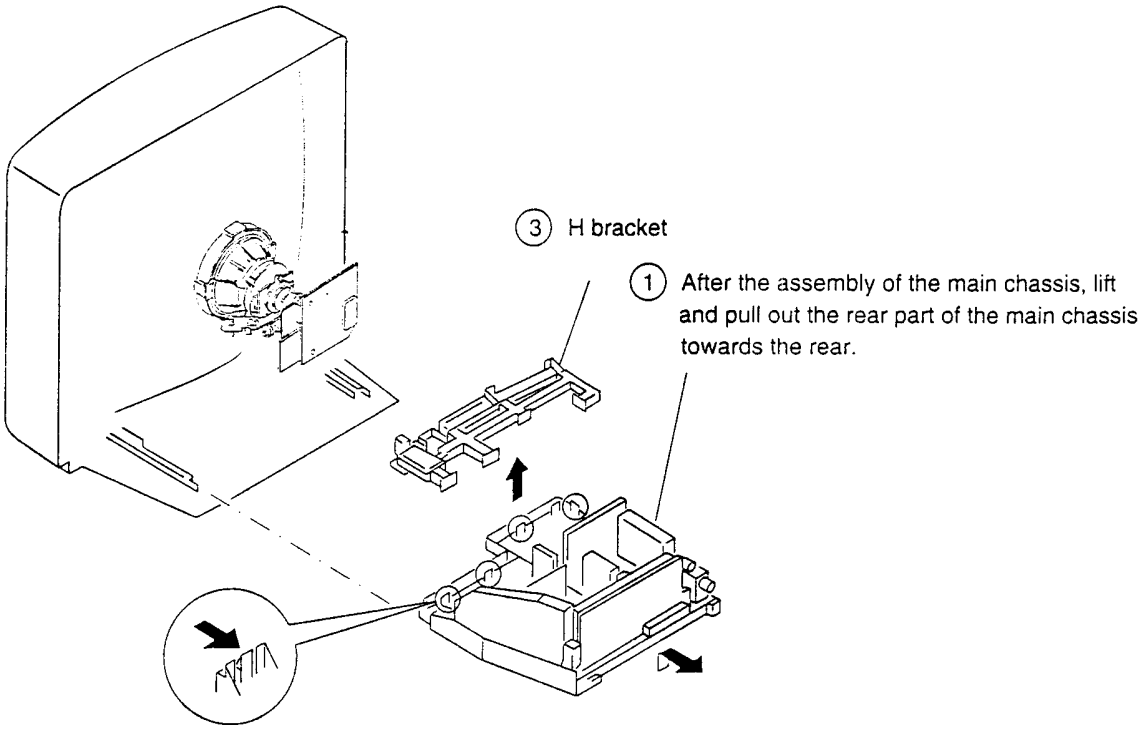

② Push the four claws of the main chassis in the direction of the arrow and remove the H bracket upwards.

2-3. SERVICE POSITION

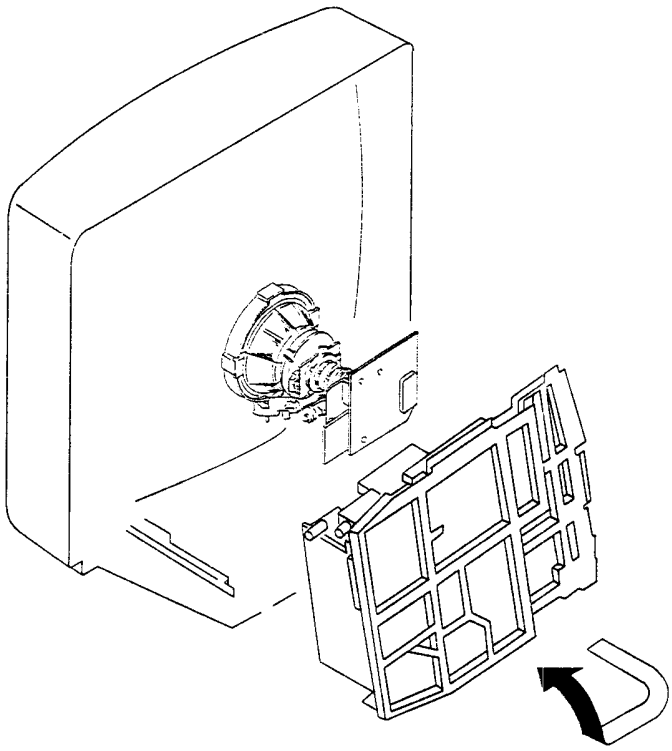

2-4. EXTENSION BOARDS

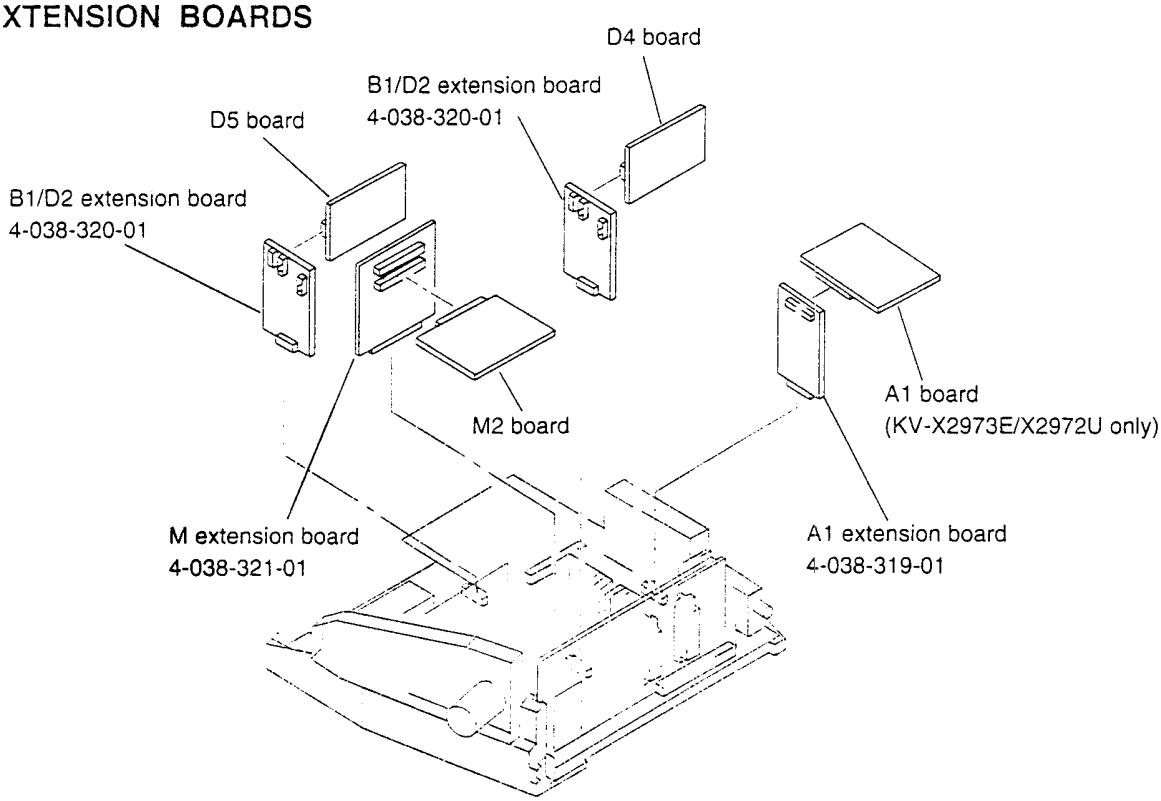

2-5. M2 AND A1 BOARD REMOVAL

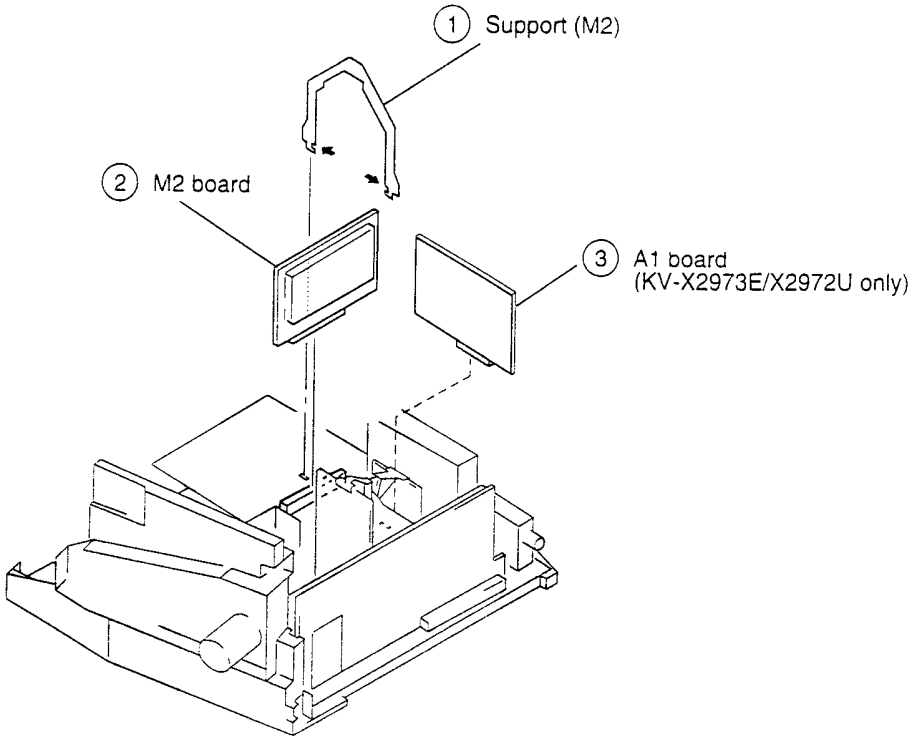

2-6. D4 AND D5 BOARD REMOVAL

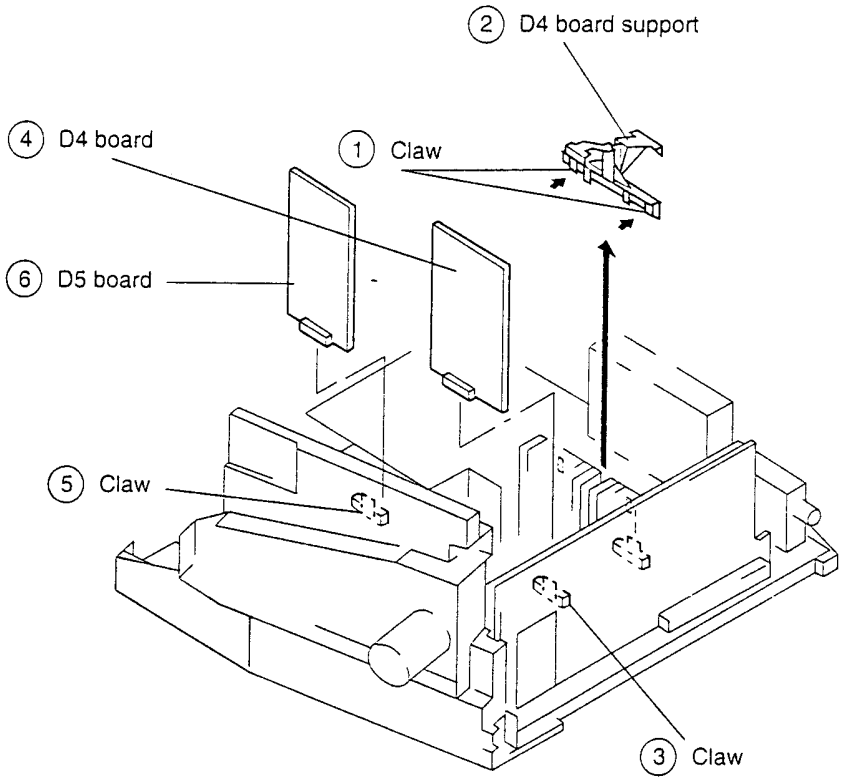

2-7. J BOARD REMOVAL

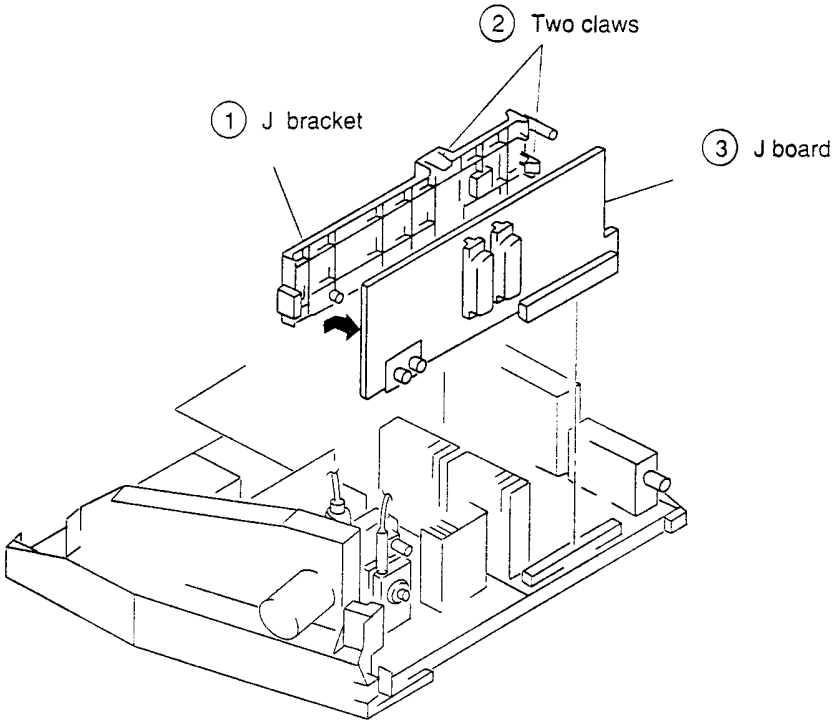

2-8. F BRACKET REMOVAL

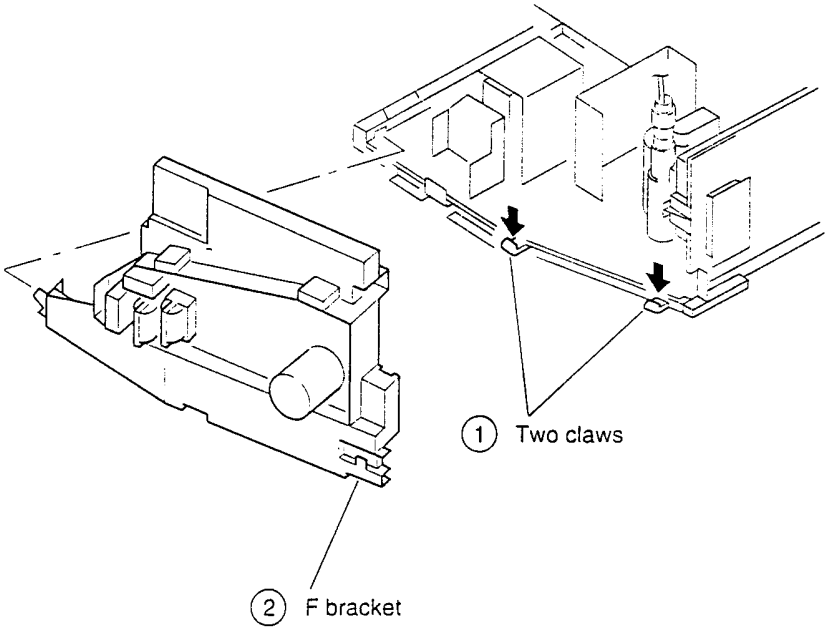

2-9-1. WIRE DRESSING

* Keep distance between ① and ②

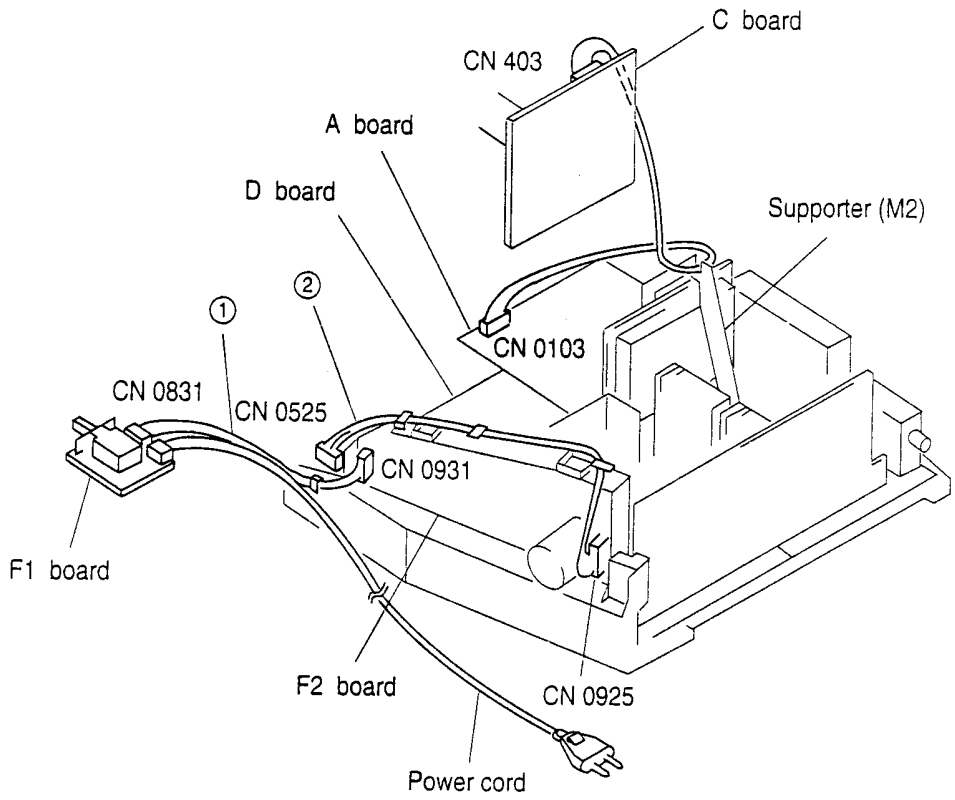

2-9-2. WIRE DRESSING

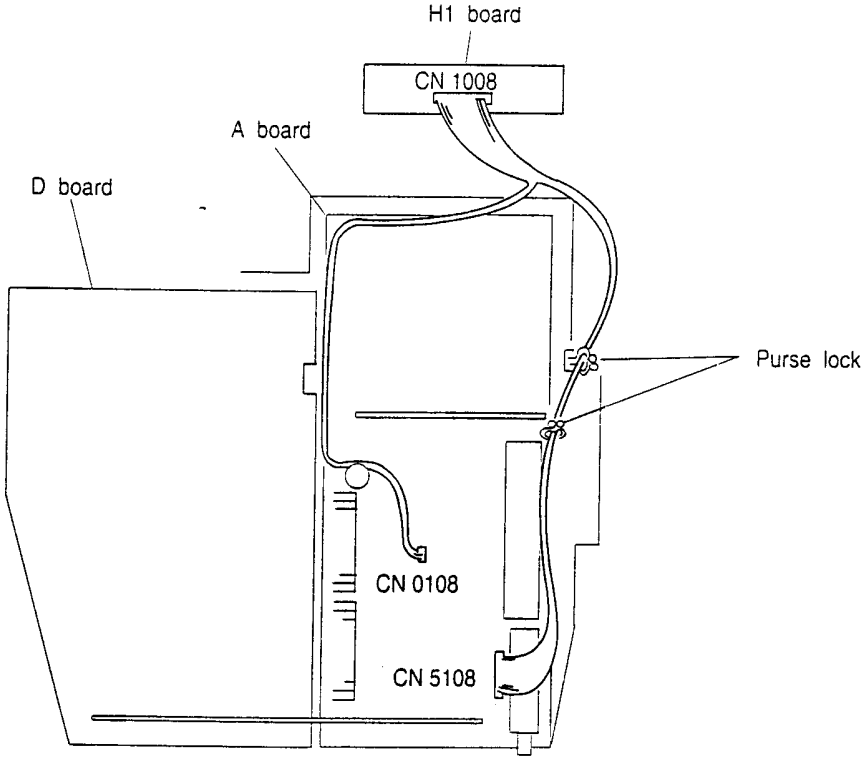

2-10. PICTURE TUBE REMOVAL

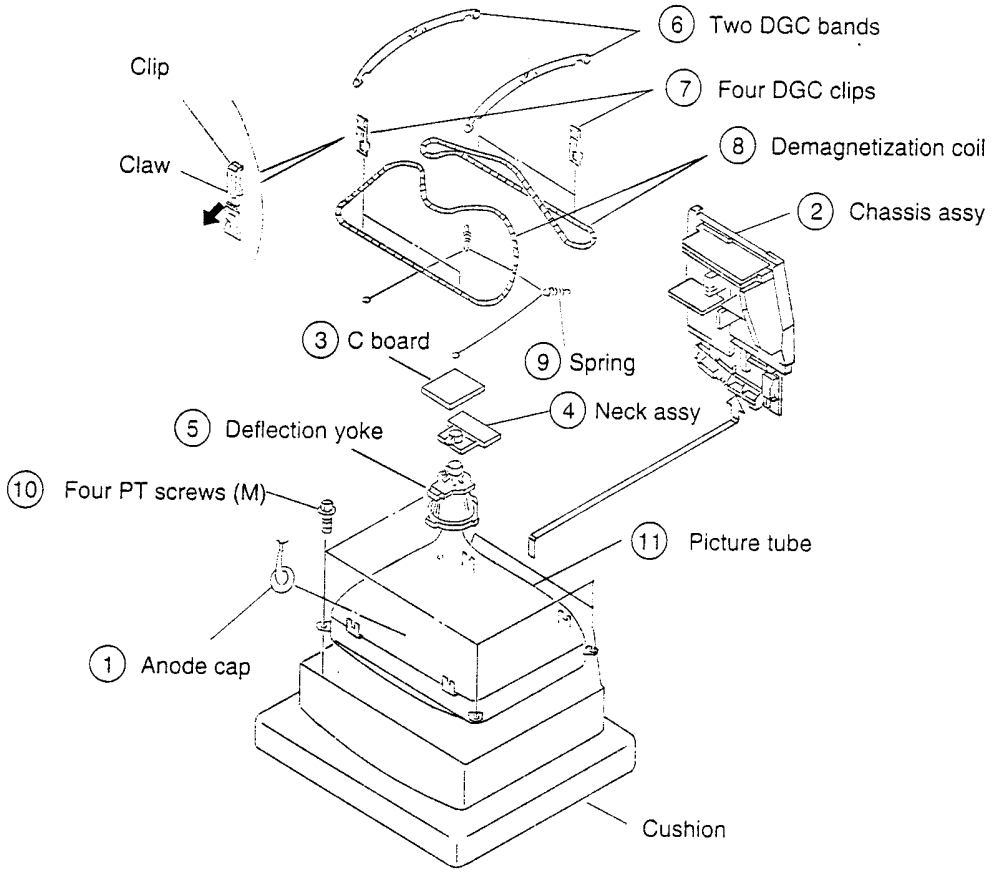

• REMOVAL OF ANODE-CAP

Note: Short circuit the anode of the picture tube and the anode cap to the metal chassis. CRT shield or carbon paint on the CRT, after removing the anode.

• REMOVING PROCEDURES.

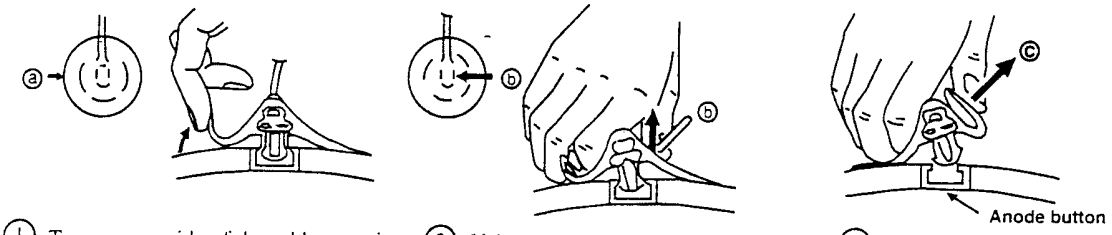

① Turn up one side of the rubber cap in the direction indicated by the arrow ⓐ

② Using a thumb pull up the rubber cap firmly in the direction indicated by the arrow ⓑ

③ When one side of the rubber cap is separated from the anode button, the anode-cap can be removed by turning up the rubber cap and pulling it up in the direction of the arrow ⓒ

• HOW TO HANDLE AN ANODE-CAP

① Don't damage the surface of anode-cap with sharp shaped material !

② Don't press the rubber hardly not to hurt inside of anode-caps !
A metal fitting called as shatter-hook terminal is built into the rubber.

③ Don't turn the foot of rubber over hardly !
The shatter-hook terminal will stick out or damage the rubber.

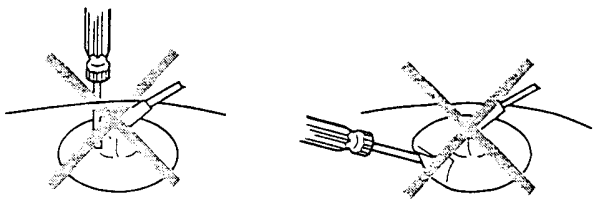

SECTION 3
SET-UP ADJUSTMENTS

- When complete readjustment is necessary or a new picture tube is installed, carry out the following adjustments.
- Unless there is specific instruction to the contrary, carry out these adjustments with the rated power supply.
- Unless there is specific instruction to the contrary, set the controls and switches this way :

◑ Contrast ..... 80% (or remote control normal)

☼ Brightness 50%

- Carry out the following adjustments in this order :

1. Beam landing
2. Convergence
3. Focus
4. White balance

Note: Testing equipment required.

1. Color bar/pattern generator
2. Degausser
3. DC power supply
4. Digital multimeter
5. Oscilloscope

Preparations :

- In order to reduce the influence of geomagnetism on the set's picture tube face it east or west.
- Switch on the set's power and degauss with the degausser.

3-1. BEAM LANDING

1. Input the white signal with the pattern generator.
   Contrast } normal
   Brightness }
2. Position neck assy as shown in Fig.3-2.
3. Set the pattern generator raster signal to red.
4. Move the deflection yoke to the rear and adjust with the purity control so that the red is at the center and the blue and the green take up equally sized areas on each side. (See Fig.3-1 - 3-3)
5. Move the deflection yoke forward and adjust so that entire screen is red. (See Fig.3-1)
6. Switch the raster signal to blue, then to green and verify the condition.
7. When the position of the deflection yoke has been decided, fasten the deflection yoke with the screws.
8. If the beam does not land correctly in all the corners, use a magnet to adjust it. (See Fig.3-4)

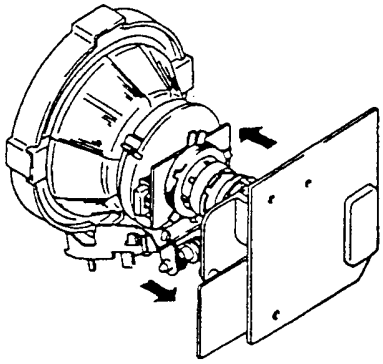

Fig.3-1

Fig.3-2

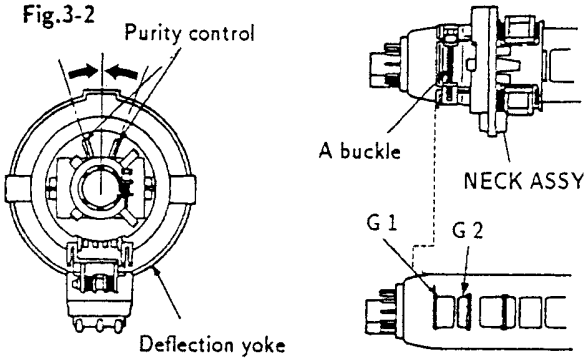

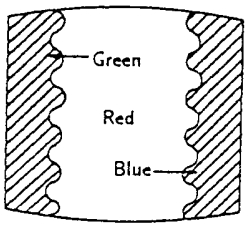

Fig.3-3

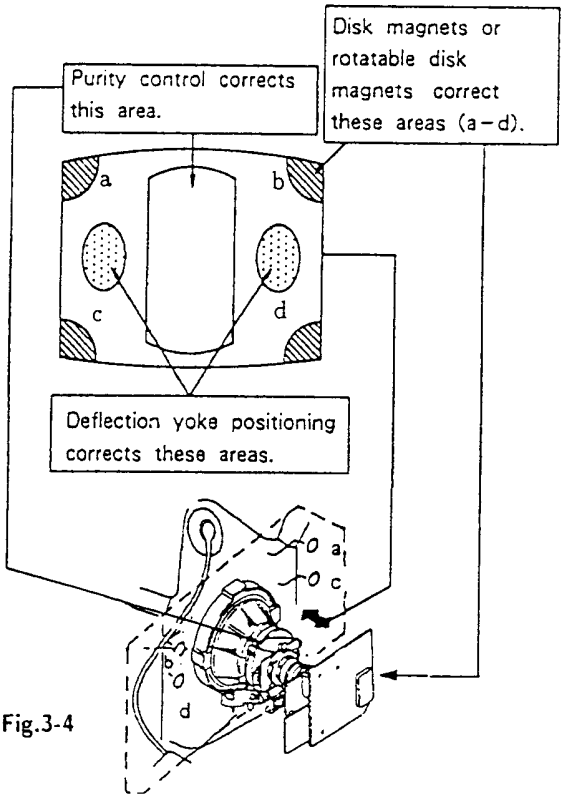

Fig.3-4

3-2. CONVERGENCE

Preparations :

- Before starting this adjustment, adjust the focus, horizontal size, and vertical size.
- Minimize the brightness setting.
- Provide dot pattern.

(1) Horizontal and vertical static convergence

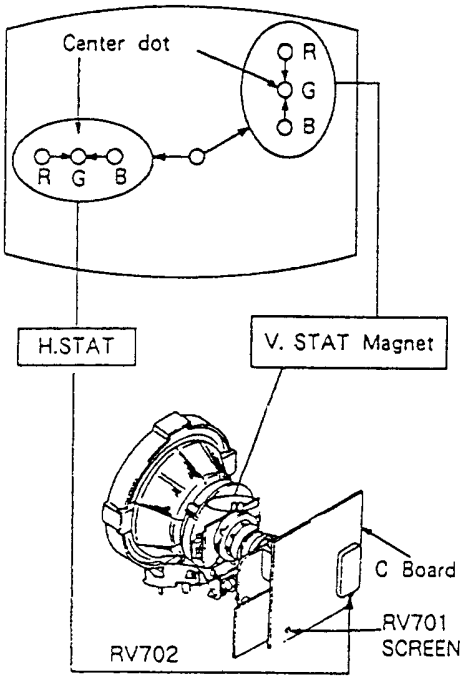

1. (Moving horizontally), adjust the H.STAT control so that the red, green, and blue points are on top of each other at the center of the screen.
2. (Moving vertically), adjust the V.STAT magnet so that the red, green, and blue points are on top of each other at the center of the screen.
3. If the H.STAT variable resistor cannot bring the red, green, and blue points together at the center of the screen, adjust the horizontal convergence with the H.STAT variable resistor and the V. STAT magnet in the manner given below.
   (In this case, the H.STAT variable resistor and the V.STAT magnet influence each other)

- Tilt the V.STAT magnet and adjust the static convergence by opening or closing the V.STAT magnet.

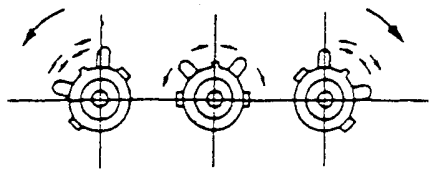

4. If the V.STAT magnet is moved in the direction of the ⓐ and ⓑ arrows, the red, green, and blue points move as shown below.

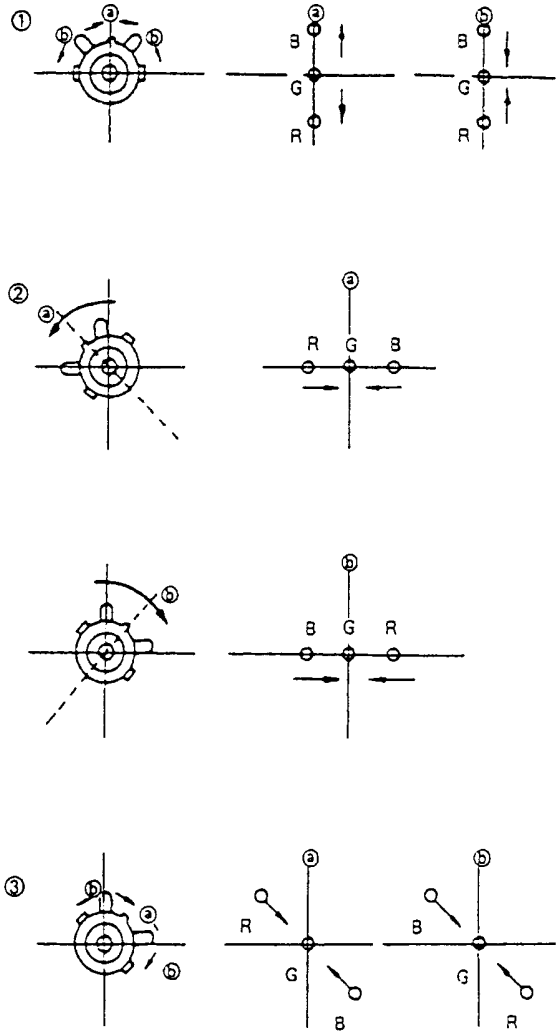

- Operation of BMC (Hexapole) Magnet

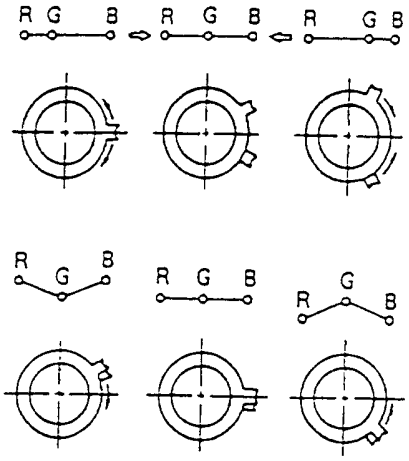

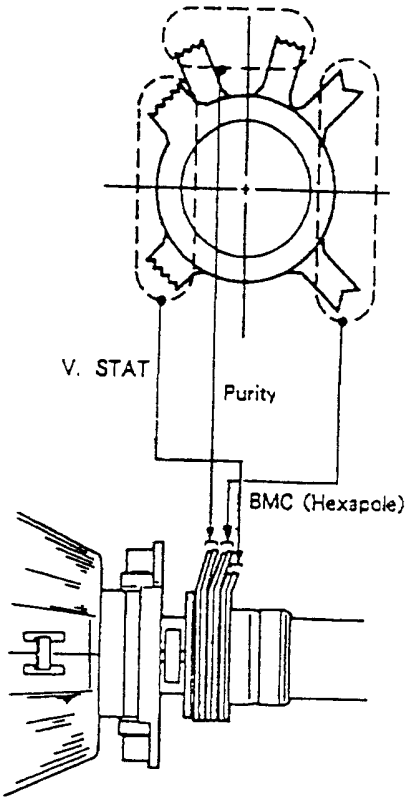

- The respective dot positions resulting from moving each magnet interact, so be sure to perform adjustment while tracking.
  Use the H.STAT VR to adjust the red, green, and blue dots so they coincide at the center of screen (by moving the dots in the horizontal direction).

(2)Dynamic convergence adjustment

Preparations :

- Before starting this adjustment, adjust the horizontal static convergence and the vertical static convergence.

1. Slightly loosen the deflection yoke screws.
2. Remove the deflection yoke spacer.
3. Move the deflection yoke as shown in the figure below and optimize the convergence.
4. Tighten the deflection yoke screws.
5. Install the deflection yoke spacer.

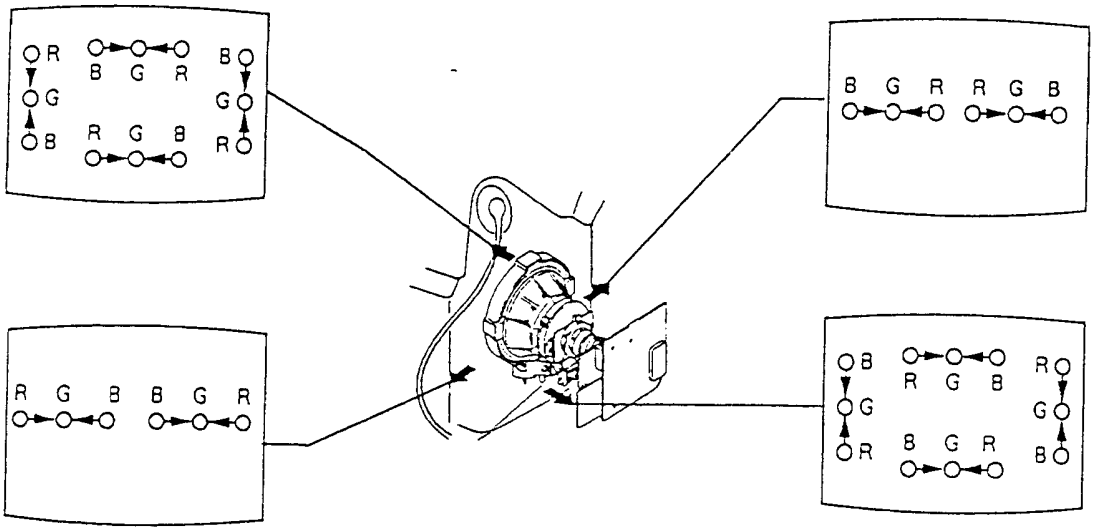

(3) Screen corner convergence

If you cannot adjust corner convergence properly, correct them with permalloy.

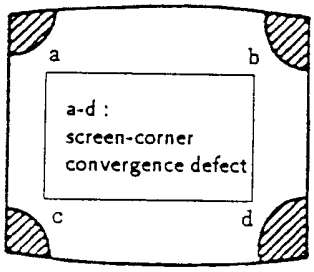

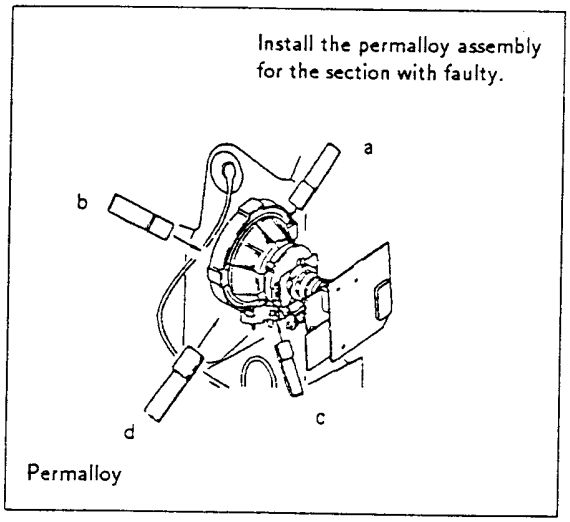

3-3. FOCUS

Adjust the focus to optimize the screen.

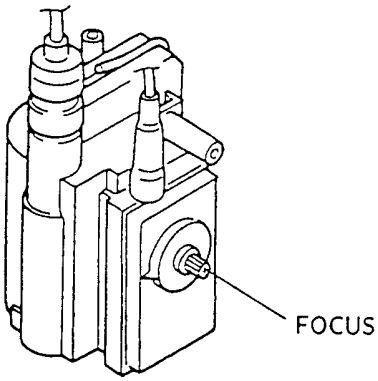

3-4. WHITE BALANCE

Screen G2 Setting

1. Input the dot signal from the pattern generator.
2. Set the picture brightness control to its lowest level.
3. Apply 180V DC to the R,G, and B cathodes with an external power supply.
4. While watching the picture, adjust G 2 control RV 701 (Screen) to the point just before the return lines disappear.

White balance adjustment

1. Receive all-white signal.
2. Enter into service mode. (Refer to the section 4 "Electrical Adjustment" to how to enter service mode.)
3. Select CXA1587S on menu.

09	SUB BRIGHT	ADJ.
10	SUB HUE	7
11	VM LEVEL	2
12	NR LEVEL	0
13	ABL MODE	0
14	G-DRIVE	ADJ.
15	B-DRIVE	ADJ.
16	G-AUTO CUT OFF	ADJ.
17	B-AUTO CUT OFF	ADJ.
18	R-MANUAL CUT OFF	ADJ.
19	G-MANUAL CUT OFF	ADJ.
20	B-MANUAL CUT OFF	ADJ.

4. Set picture to MAX.
5. Adjust G-DRIVE B-DRIVE with ⊡, ⊡ buttons so that the white balance becomes optimum.
6. Press OK button to write the data for each item.
7. Set picture to MIN.
8. Adjust G-AUTO CUT OFF, B-AUTO CUT OFF, R -MANUAL CUT OFF, G-MANUAL CUT OFF and B-MANUAL CUT OFF with ⊡, ⊡ buttons so that the white balance becomes optimum.
9. Press OK button to write the data for each item.

SECTION 4
CIRCUIT ADJUSTMENTS

4-1. ELECTRICAL ADJUSTMENTS

Service adjustment to this model can be performed with the supplied remote commander RM-831

HOW TO ENTER INTO SERVICE MODE

1. Turn on the main power switch of the set while pressing any two buttons on the front panel.

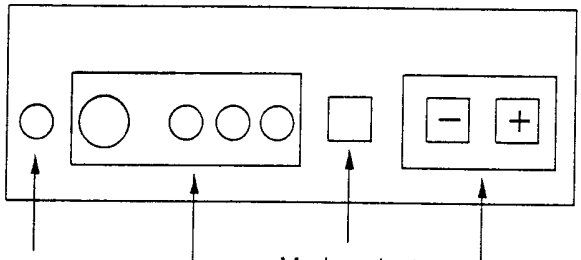

Fig.4-1

2. "TT" will appear at the upper right corner of the screen.

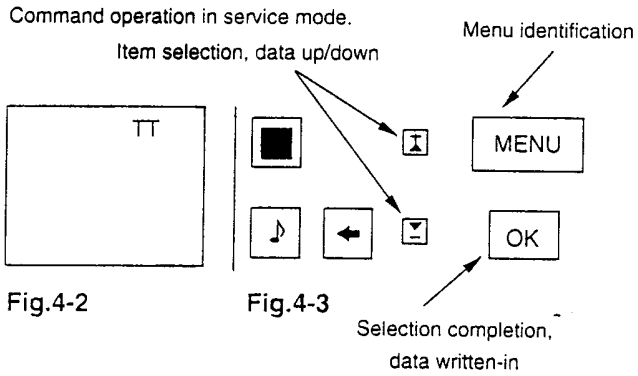

Fig.4-2 Fig.4-3

3. Press the MENU button on the remote commander to obtain the menu on the screen.

MAIN MENU
Programme Table
Video Connection
Picture Control
Sound Control
Timer
Preset
Language
> DEMO
Select < > and press OK

Fig.4-4

4. Press the ▲ and ▼ buttons on the remote commander and move > to DEMO.
5. Press [OK] button to proceed to the next menu.
6. The menu of fig. 4-5 will appear on the screen. Select the DEVICE corresponding to the adjustment item from the table on the next page.

DEVICES
Initialize
> CXA1587
CXD2018
TDA9145
CXA1526
TDA6612
CX7948A
P/P service
Select < > and press OK

Fig. 4-5

7. If adjustment item is CXA1587, press the ▼ button and move > to CXA1587.

CXA1587

Item No	Adjustment item	Data Amount
01	PICTURE	53
02	COLOR	31
03	BRIGHT	31
04	HUE	31
05	SHARPNESS	12
06	RGB PICTURE	7
07	SUB CONTRAST	ADJ.
08	SUB COLOR	ADJ.
> 09	SUB BRIGHT	ADJ.
10	SUB HUE	8
11	VM LEVEL	2
12	NR LEVEL	0
13	ABL MODE	0
14	G-DRIVE	ADJ.
15	B-DRIVE	ADJ.

8. Press [OK] button to get the next selection menu.
9. Press ▼ button and move > to the adjustment item and press [OK] button.
10. Press ▲ and ▼ buttons to change the data in order to comply with each standard.
11. Press [OK] button to write data.
12. Turn off the power to quit service mode when adjustments are completed.

CXA1587

Item No	Adjustment item.	Data Amount
01	PICTURE	53
02	COLOR	31
03	BRIGHT	31
04	HUE	31
05	SHARPNESS	12
06	RGB PICTURE	7
07	SUB CONTRAST	ADJ.
08	SUB COLOR	ADJ.
09	SUB BRIGHT	ADJ.
10	SUB HUE	8
11	VM LEVEL	2
12	NR LEVEL	0
13	ABL MODE	0
14	G-DRIVE	ADJ.
15	B-DRIVE	ADJ.
16	G-AUTO CUT OFF	ADJ.
17	B-AUTO CUT OFF	ADJ.
18	R-MANUAL CUT OFF	ADJ.
19	G-MANUAL CUT OFF	ADJ.
20	B-MANUAL CUT OFF	ADJ.
21	GAMMA LEVEL	8
22	DC TRANSFER RATIO	3
23	DYNAMIC PICTURE	2
24	Y FILTER ADJ	ADJ.
25	Y DELAY TIME	15
26	Y DELAY SWITCH 1	0
27	Y DELAY SWITCH 2	1
28	SHARPNESS LIMIT	ON
29	TRAP	OFF
30	H SHIFT	36
31	DA TEST	ON
32	PRE/OVER	12
33	SUB FOCUS	2
34	SUB SHARPNESS	3
35	R MUTE	OFF
36	G MUTE	OFF
37	B MUTE	OFF
38	AGING 1 WHT	OFF
39	AGING 2 BLK	ON
40	AKB OFF	ON
41	INHIBIT RGB	ON
42	FORCED RGB	OFF
43	V/2 V	OFF
44	AXIS	PAL
45	HUE OFF	OFF
46	V EXTENSION	OFF
47	AFC 1	1
48	AFC 2	0
49	AFC	OFF
50	REF. POSITION	0

CXD2018

Item No	Adjustment item.	Data Amount
01	V SIZE	ADJ.
02	V SHIFT	ADJ.
03	S CORRECTION	ADJ.
04	V LINEARITY	ADJ.
05	H SIZE	ADJ.
06	PIN AMP	ADJ.
07	TILT	ADJ.
08	UPPER CORNER	ADJ.
09	LOWER CORNER	ADJ.
10	V BOW	ADJ.
11	ANGLE	ADJ.
12	HV COMP. V	12
13	HV COMP. H	8
14	FRAME SHIFT	OFF
15	FREE RUN 60 Hz	OFF
16	SYSTEM 60 Hz	OFF
17	ASPECT WIDE	OFF
18	DOUBLE SCAN	OFF
19	INTERLACE	ON
20	H SHIFT	26
21	N/S CORRECTION	ADJ.

Typical On Screen Display based values when receiving PAL Phillips pattern.

TDA6612	ADJ
Stereo-Separation	(31)

Should be adjusted twice, once for 4 : 3 and once for 16 : 9 mode.

Y FILTER ADJUSTMENT

1. Input a PAL RED pattern.
2. Connect an oscilloscope to pin ① of CN0403 (R OUT) on C board.
3. Enter into service mode and press 3,8.
4. Adjust data by △ or ▽ to minimize the chroma element at CN0403 pin ①.

SUB BRIGHTNESS ADJUSTMENT

1. Input a Phillips pattern.
2. Enter into service mode and press 23.
3. Adjust data so that 0-IRE of grey scale and CUT-OFF 20-IRE are only slightly visible on screen.

SUB CONTRAST ADJUSTMENT

1. Input a video that contains a small 100% area on a Black Background.
2. Enter into service mode and press 01 to have PIC max followed by 21.
3. Connect oscilloscope to pin ① of CN0403 (R OUT) and adjust data to obtain 2.5Vp-p.

SUB COLOR ADJUSTMENT

1. Input a PAL color bar signal.
2. Connect an oscilloscope to pin ③ of CN0403 (B OUT) on the C board.
3. Enter into service mode and press 22 of CXA1587, 8 SUB COLOR.
4. Adjust data so that the right sides of the waveform are set to the same level.

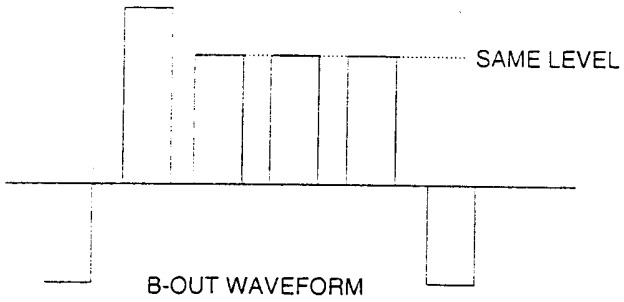

STEREO-SEPARATION ADJUSTMENT

1. Input a 1kHz stereo signal to the L-ch and a 400Hz stereo signal to the R-ch.
2. Enter into service mode and press 19.
3. Adjust data so that sound is not detected in the Right-ch and the Left-ch.

DRIVE AND CUT-OFF

See direct test mode list attached and refer to sub brightness or such for adjustment method.

DEFLECTION SYSTEM ADJUSTMENT

1. Enter into service mode and select CXD2018.
2. Select and adjust each item in order to obtain the optimum image.

CXD2018

Item No	Adjustment item.	Data Amount
01	V SIZE	ADJ.
02	V SHIFT	ADJ.
03	S CORRECTION	ADJ.
04	V LINEARITY	ADJ.
05	H SIZE	ADJ.
06	PIN AMP	ADJ.
07	TILT	ADJ.
08	UPPER CORNER	ADJ.
09	LOWER CORNER	ADJ.
10	V BOW	ADJ.
11	ANGLE	ADJ.
12	HV COMP. V	12
13	HV COMP. H	8
14	FRAME SHIFT	OFF
15	FREE RUN 60 Hz	OFF
16	SYSTEM 60 Hz	OFF
17	ASPECT WIDE	OFF
18	DOUBLE SCAN	OFF
19	NON INTERLACE	ON
20	H SHIFT	26
21	N/S CORRECTION	ADJ.

V SIZE

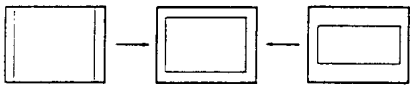

V SHIFT

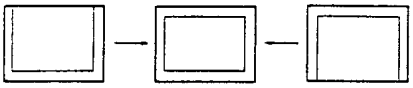

S CORRECTION

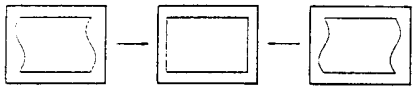

V LINEARITY

H SIZE

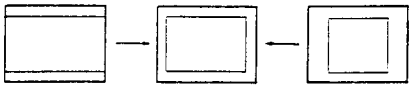

PIN AMP

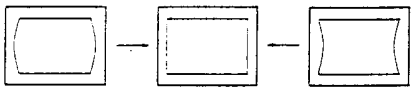

TILT

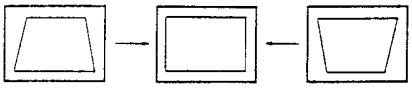

UPPER CORNER PIN

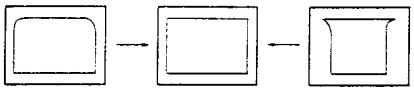

LOWER CORNER PIN

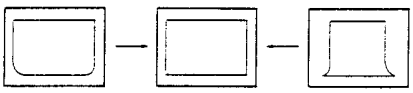

V BOW

ANGLE

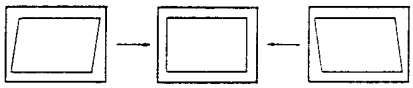

H SHIFT

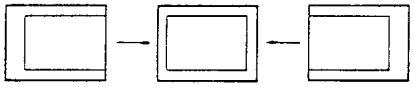

N/S CORRECTION

3. Press OK button to write data.

If the menu display prevents accurate adjustment, press to clear, to resume, press once again.

4-2. VOLUME ELECTRICAL ADJUSTMENTS

+B (+135V) ADJUSTMENT (RV601)

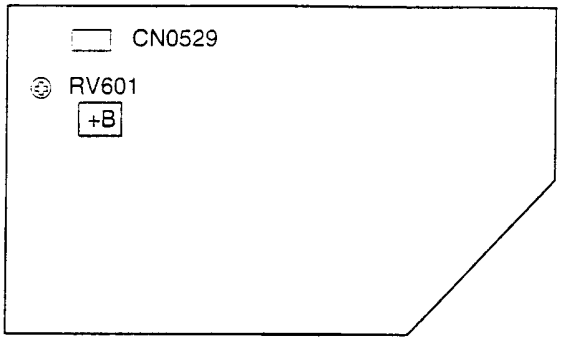

1. Switch on the power to the TV set.
2. Connect a digital multi-meter to pin ① of CN0529 on D board.
3. Adjust RV601 on D board to +135V ± 0.5V.

AGC ADJUSTMENT (IF BLOCK)

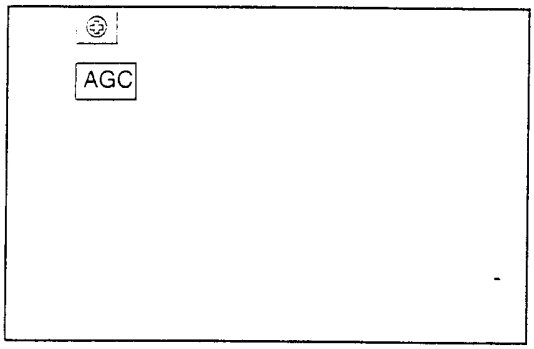

1. Receive an off-air signal.
2. Adjust the AGC VR so that there is no snow noise or cross-modulation visible on the screen.
3. Change the receiving channel and confirm status.

PULSE WIDTH & V-PIN ADJUSTMENTS (RV 1851/1853)

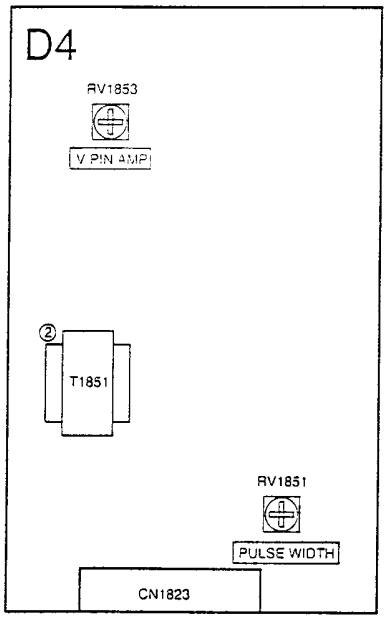

1. Connect an oscilloscope to pin ② of T1851.
2. Preset RV-1853 to center of its range (mechanical center).
3. Adjust RV-1851 to obtain minimum amplitude.
4. Switch the oscilloscope input to D.C.and adjust RV-1853 to obtain -33.2 ± 0.5V.

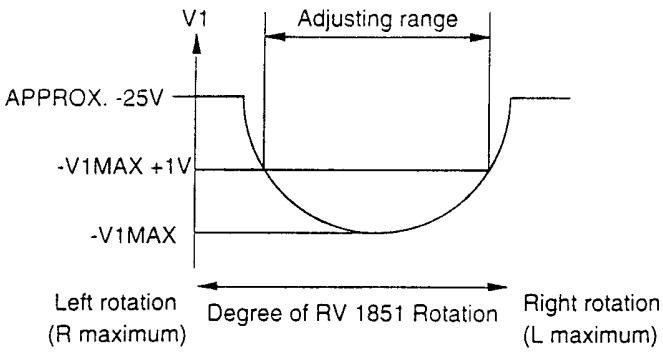

4-3. TEST MODE 2 :

Is available by pressing Test button twice, OSD 'TT' appears. The functions described below are available by pressing the two numbers. To release the Test Mode 2, press 0 twice, or switch the TV into Stand-by Mode.

00	switch Test Mode 2 off
01	picture maximum
02	picture minimum
03	Volume 35%
04	Volume 50%
05	Volume 65%
06	Volume 80%
07	Ageing Condition (Volume min., Picture max., Brightness max., Ageing 2 Mode of CXA1587, TDA2595 is locked to CXA1587 via PIN 34 of µ-Con.)
08	Shipping Condition (Analog Values are RESET due to factory setting, Prog 1 is selected, TT Mode is switched off)
09	dummy
10	Tenth entry is deleted
11	Balance
12	Hue
13	Display of Software Version and TV set configeration
14	Adjustment of N/S Correction
15	Read factory setting from NVM Reads Volume, Balance, Treble, Bass, Brightness, Contrast, Hue, Sharpness, Colour values from ROM to the actual used values (Last Power Memory)
16	Save actual used values as RESET values Memorize actual used values Balance, Treble, Bass, Hue, Sharpness at RESET position in NVM.
17	Preset Level for AV Sources
18	dummy
19	Stereo Seperation
20	Tenth entry is deleted
21	Sub Contrast
22	Sub Colour
23	Sub Brightness
24-29	dummy

30	Tenth entry is deleted
31	Green Drive
32	Blue Drive
33	Green Cut Off (Auto Cut Off)
34	Blue Cut Off (Auto Cut Off)
35	Red Cut Off (Manual Cut Off) (Auto Cut Off is switched off)
36	Green Cut Off (Manual Cut Off) (Auto Cut Off is switched off)
37	Blue Cut Off (Manual Cut Off) (Auto Cut Off is switched off)
38	Y-Filter adjustment (Trap is switched off and TDA9145 is switched in forced NTSC Mode)
39	dummy
40	Tenth entry is deleted
41	Default setting of CXA1587 (Only available in Prog 99)
42	Default setting of CXA2018 (Only available in Prog 99)
43	Default setting of CXA1526 (Only available in Prog 99)
44	(all Port High) Not yet
45	(all Port High) Not yet
46	IR Channel Pressetting Mode The channel pressetting can be done by a Special IR Transmitter
47-48	dummy
49	Erase the NVM Testbyte (this byte detects already stored NVM's) After selecting this function, switch TV Off and On -> the NVM will be preset by µ-Controller. (Not the channel data)

Note: For No 35, 36, 37 and 38 special pressing (AKB, forced Color Mode, Trap) is selected. After selecting a new Test Mode Number, the AKB is switched ON, the Trap is switched ON and TDA9145 is switched to Auto Search Mode.

In Test Mode 2 the Menu display is switchable by the Speaker-Off button.

4-4. ERROR MESSAGE

Self diagnostic system operates as follows.

- When the microprocessor is unable to receive an acknowledgement back from the device, the LED starts flashing according to the table below.

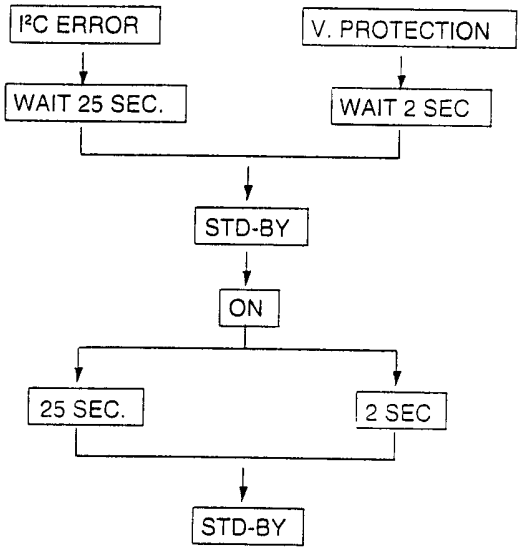

In the case of more than one error in parallel, the blinking error shows max priority according to the error number (e.g. error 2 and error 5 appear together, then LED,s show error 2).

ERROR TABLE

ERROR COUNT	IC TYPE	FUNCTION
1	II C BUS	SDA low
2	X24C16	EPROM
4	TDA9145	Colour decoder
5	CXA1587	RGB/Jungle
6	TDA6612	Sound processor
7	CXD2018	V deflection
8	CXA1545	AV switch
11	SDA5248	Text
13		V protection

Stand By LED blinking No 1K return

4-5. ERROR I²C BUS DIAGNOSTIC SYSTEM FOR AE2-B CHASSIS.

For all IC's used in the AE 2-B chassis which are necessary to obtain picture and sound there is an inbuilt I²C Bus diagnostic system.

In the case of no acknowledge bit, LED A and LED B start blinking as shown.

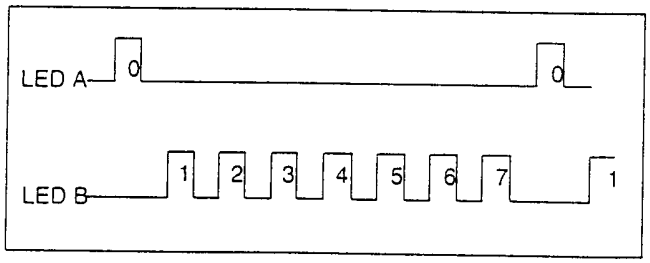

SECTION 5
DIAGRAMS

5-1. BLOCK DIAGRAM (1)

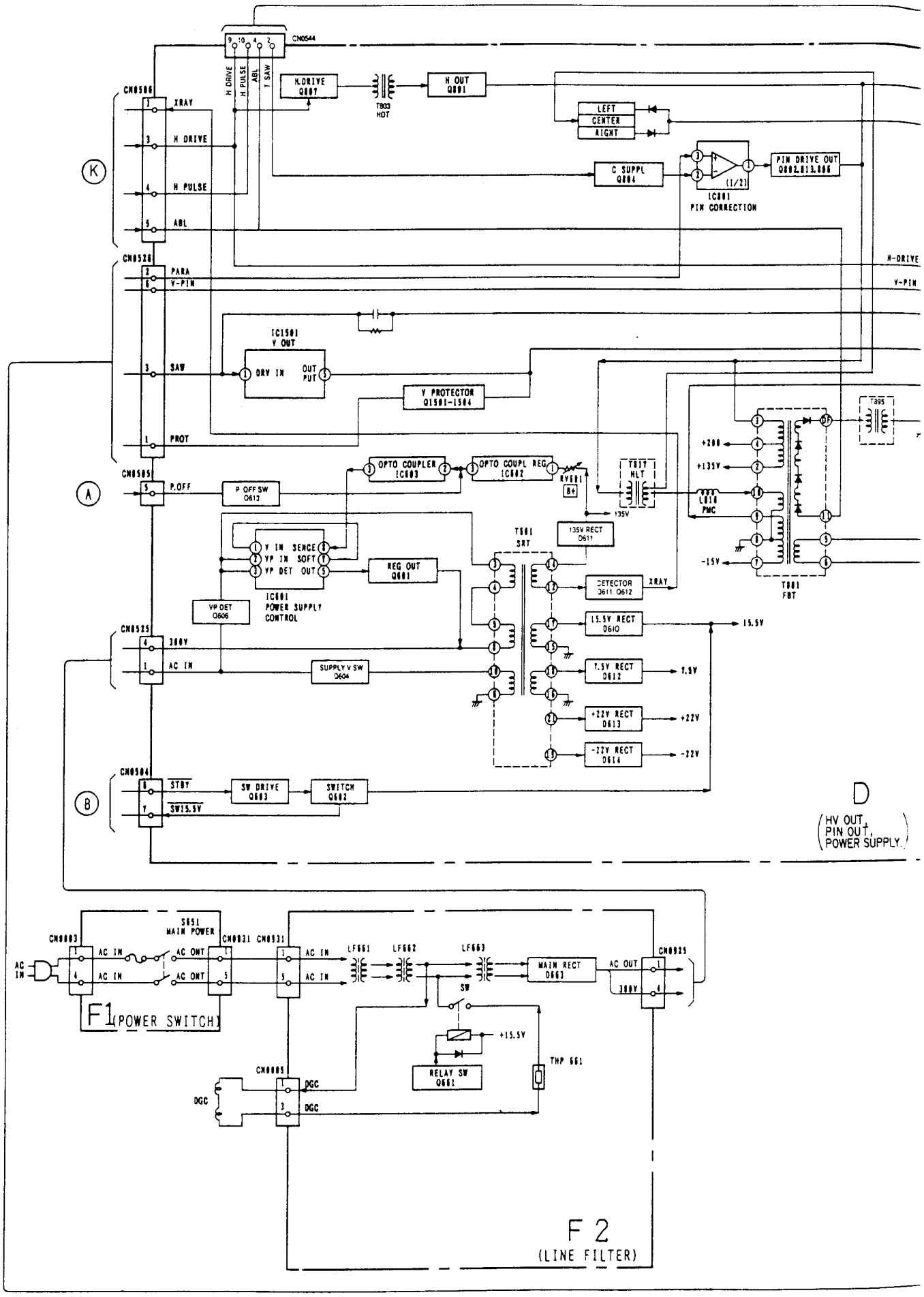

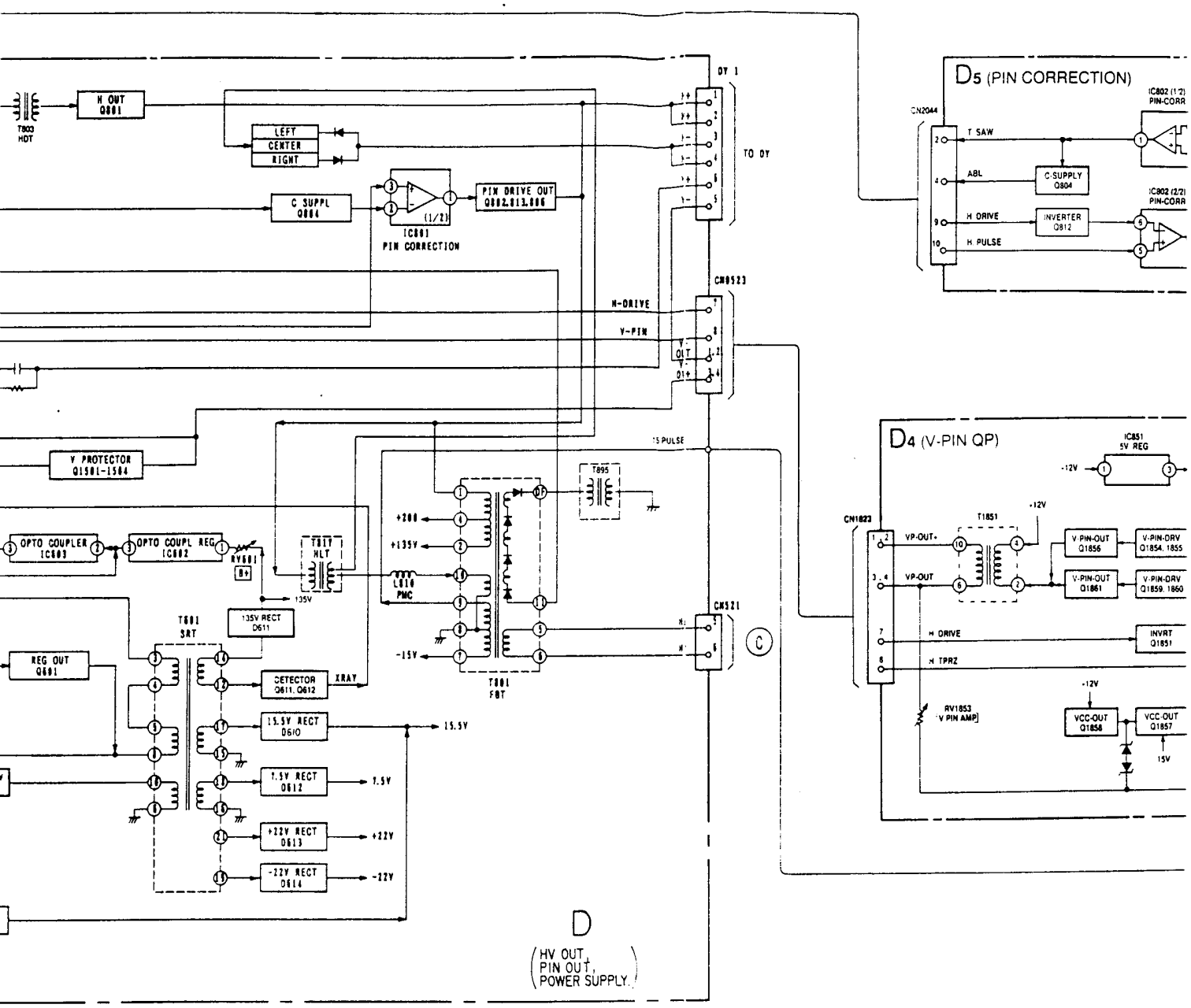
H OUT Q801
T803 HDT
LEFT
CENTER
RIGHT
C SUPPL Q804
PIN DRIVE OUT Q802,813,806
IC801 PIN CORRECTION
DY 1
TO DY
CN0523
H-DRIVE
V-PIN
V PROTECTOR Q1501-1504
OPTO COUPLER IC603
OPTO COUPL REG IC602
RV601
B+
T817 HLT
135V
135V RECT D611
T601 SRT
REG OUT Q601
DETECTOR Q611, Q612
XRAY
15.5V RECT D610
15.5V
7.5V RECT D612
7.5V
+22V RECT D613
+22V
-22V RECT D614
-22V
+200
+135V
-15V
L614 PMC
T895
T801 FBT
CN521
D
(HV OUT, PIN OUT, POWER SUPPLY)
D5 (PIN CORRECTION)
CN2044
T SAW
ABL
C-SUPPLY Q804
H DRIVE
INVERTER Q812
H PULSE
IC802 (1/2) PIN-CORR
IC802 (2/2) PIN-CORR
D4 (V-PIN QP)
IC851 5V REG
-12V
+12V
CN1823
T1851
VP-OUT+
VP-OUT
V-PIN-OUT Q1856
V-PIN-DRV Q1854, 1855
V-PIN-OUT Q1861
V-PIN-DRV Q1859, 1860
H DRIVE
INVRT Q1851
H TPRZ
RV1853 V PIN AMP
VCC-OUT Q1858
VCC-OUT Q1857
15V
LF662
LF663
MAIN RECT D663
AC OUT
CN0925
SW
+15.5V
RELAY SW Q661
THP 661
F 2
(LINE FILTER)

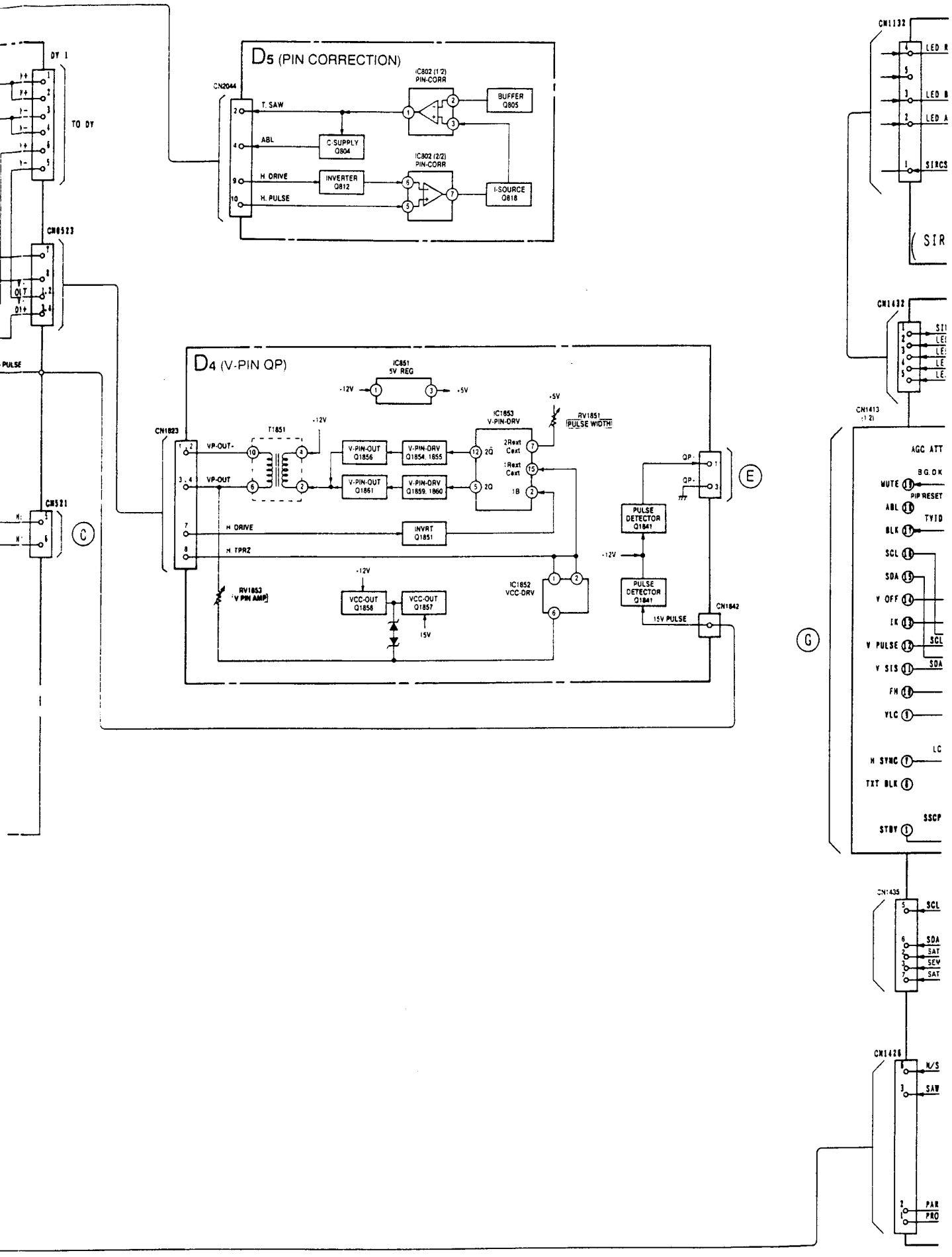
D5 (PIN CORRECTION)
CN2044
T. SAW
ABL
H. DRIVE
H. PULSE
C.SUPPLY Q804
INVERTER Q812
IC802 (1/2) PIN-CORR
IC802 (2/2) PIN-CORR
BUFFER Q805
I-SOURCE Q818
D4 (V-PIN QP)
IC851 5V REG
-12V
+5V
CN1823
T1851
VP-OUT-
VP-OUT
V-PIN-OUT Q1856
V-PIN-OUT Q1861
V-PIN-DRV Q1854, 1855
V-PIN-DRV Q1859, 1860
IC1853 V-PIN-DRV
RV1851 PULSE WIDTH
H. DRIVE
H. TPRZ
INVRT Q1851
RV1853 V PIN AMP
VCC-OUT Q1858
VCC-OUT Q1857
IC1852 VCC-DRV
15V
PULSE DETECTOR Q1841
15V PULSE
CN1842
QP+
QP-
TO DY
DY 1
CN0523
CN521
CN1132
CN1432
CN1413
CN1435
CN1426
LED R
LED B
LED A
SIRCS
AGC ATT
MUTE
ABL
BLK
SCL
SDA
V OFF
IK
V PULSE
V SIS
FH
VLC
H SYNC
TXT BLK
STBY
N/S
SAW

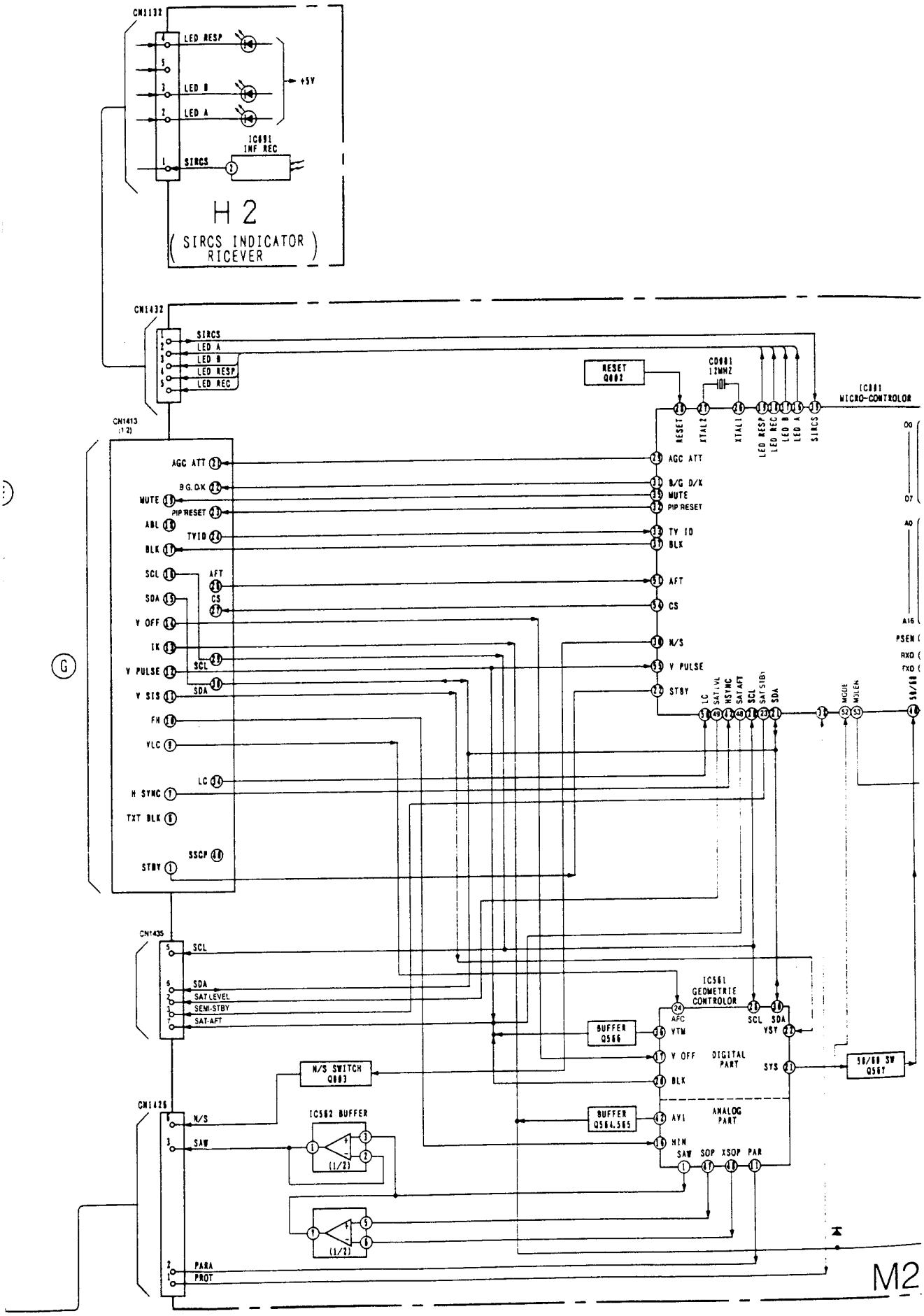
CN1132
LED RESP
LED B
LED A
+5V
IC891
INF REC
SIRCS
H 2
(SIRCS INDICATOR RICEVER)
CN1432
SIRCS
LED A
LED B
LED RESP
LED REC
RESET Q802
CO801 12MHZ
IC881 MICRO-CONTROLOR
RESET
XTAL2
XTAL1
LED RESP
LED REC
LED B
LED A
SIRCS
CN1413 (1/2)
AGC ATT
B.G. D/K
MUTE
PIP RESET
ABL
TV ID
BLK
SCL
SDA
V OFF
IK
V PULSE
V SIS
FH
VLC
H SYNC
TXT BLK
STBY
AFT
CS
SSCP
LC
N/S
STBY
SAT LVL
MSYNC
SAT AFT
SAT STB
MODE
WDEN
SB/SB
D0
D7
A0
A16
PSEN
RXD
TXD
G
CN1435
SCL
SDA
SAT LEVEL
SEMI-STBY
SAT-AFT
IC561 GEOMETRIC CONTROLOR
AFC
VTM
V OFF
BLK
SCL
SDA
VSY
SYS
DIGITAL PART
BUFFER Q566
N/S SWITCH Q803
SB/SB SW Q567
CN1426
N/S
SAW
PARA
PROT
IC562 BUFFER
(1/2)
BUFFER Q564,565
AV1
HIN
ANALOG PART
SAW
SOP
XSOP
PAR
M2

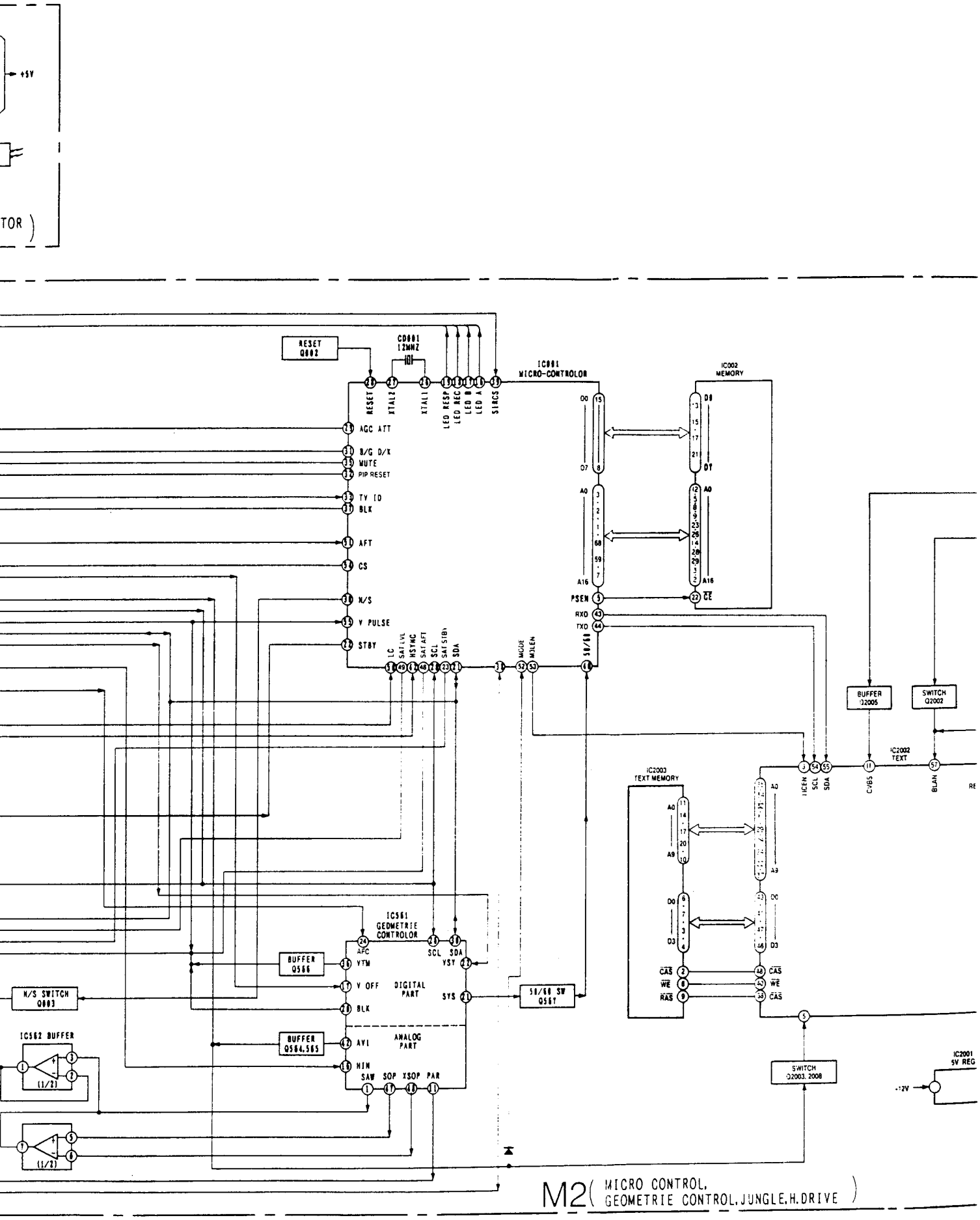

M2(MICRO CONTROL, GEOMETRIE CONTROL, JUNGLE, H.DRIVE)

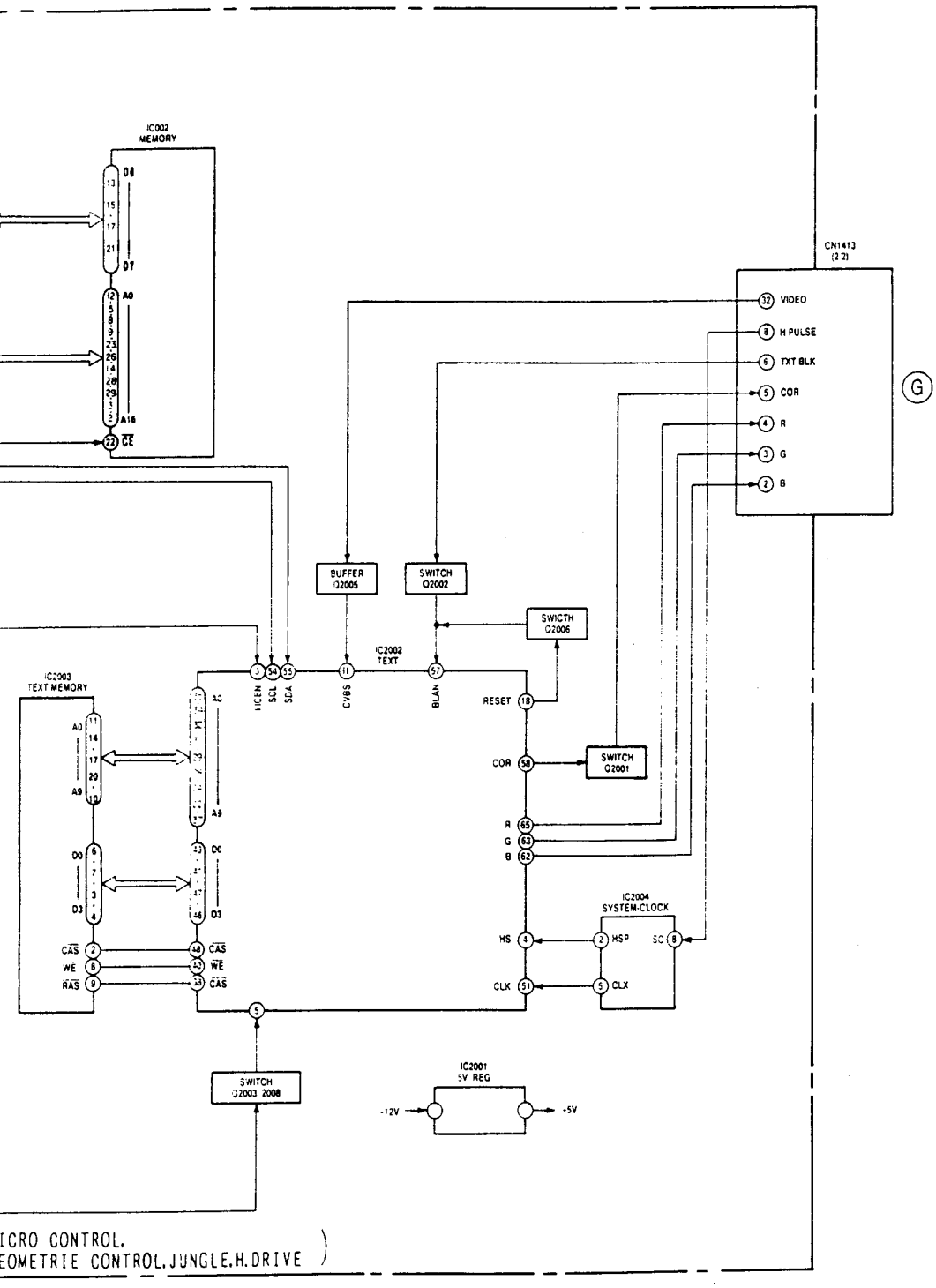
IC002
MEMORY
D0
D7
A0
A16
CE
CN1413
(22)
VIDEO
H PULSE
TXT BLK
COR
R
G
B
G
BUFFER
Q2005
SWITCH
Q2002
SWICTH
Q2006
IC2002
TEXT
VCEN
VCS
VDS
CVBS
BLAN
RESET
COR
SWITCH
Q2001
R
G
B
IC2003
TEXT MEMORY
A0
A9
D0
D3
CAS
WE
RAS
IC2004
SYSTEM-CLOCK
HS
HSP
SC
CLK
CLX
SWITCH
Q2003, 2008
IC2001
5V REG
-12V
+5V
ICRO CONTROL,
EOMETRIE CONTROL, JUNGLE, H. DRIVE

BLOCK DIAGRAM (2)

Spanish, UK model only

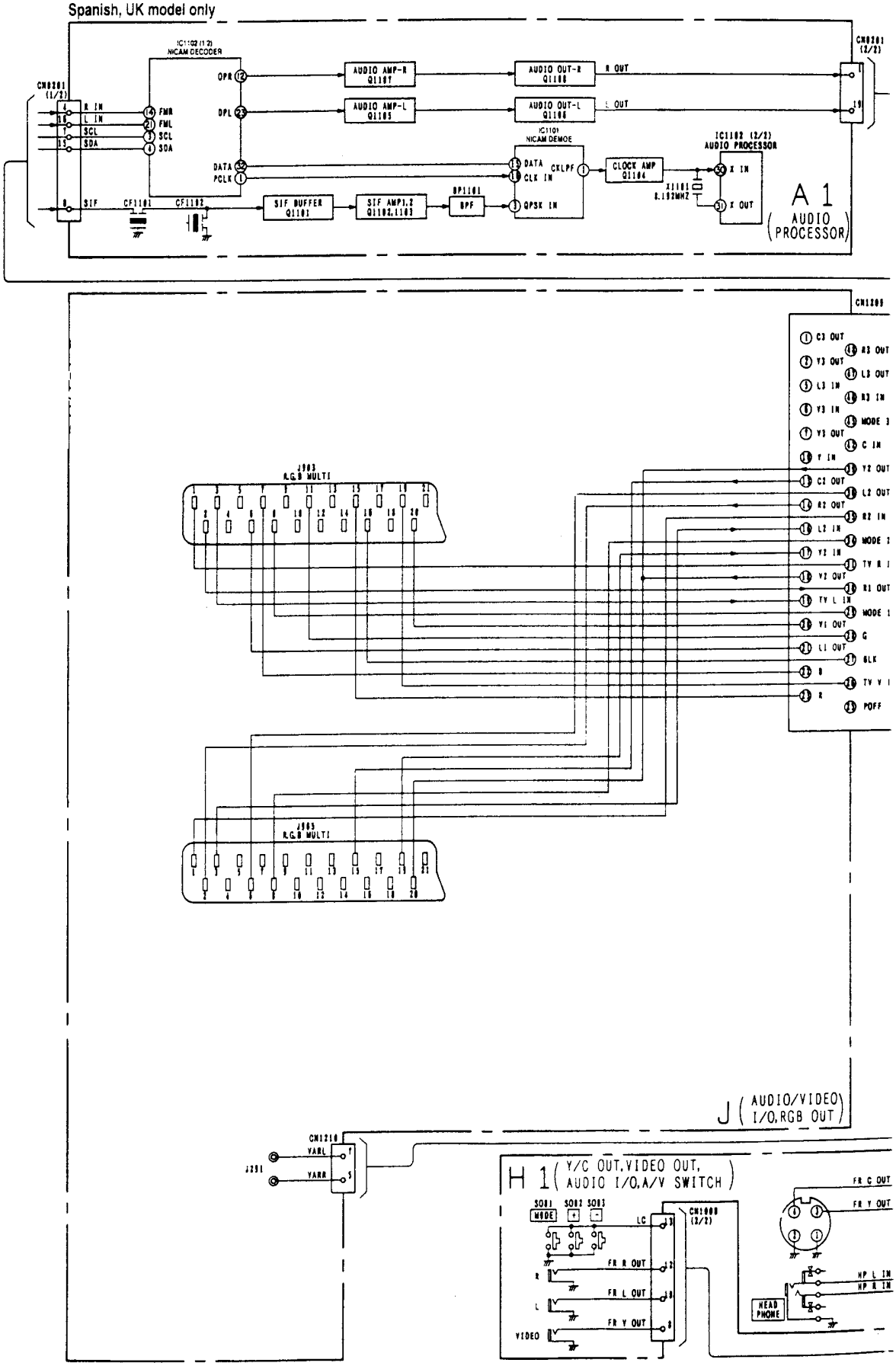

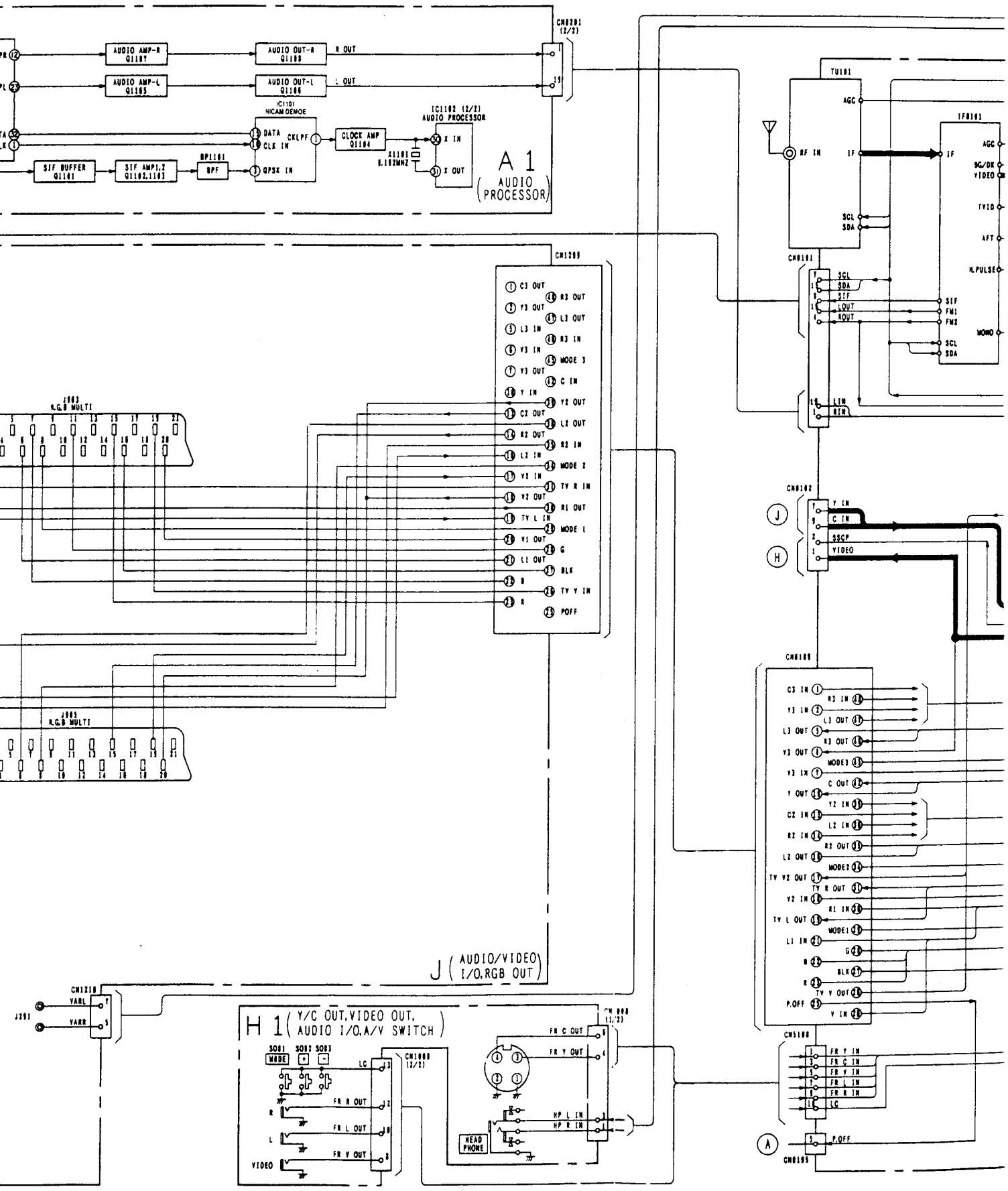
AUDIO AMP-R Q1187
AUDIO OUT-R Q1188
R OUT
AUDIO AMP-L Q1185
AUDIO OUT-L Q1186
L OUT
IC1101 NICAM DEMOD
DATA
CLK IN
CKLPF
QPSK IN
CLOCK AMP Q1184
IC1102 (2/2) AUDIO PROCESSOR
X IN
X OUT
X1101 8.192MHZ
SIF BUFFER Q1181
SIF AMP1,2 Q1182,1183
BP1101 BPF
CN8201 (2/2)
A 1 (AUDIO PROCESSOR)
TU101
AGC
RF IN
IF
SCL
SDA
IF8101
SG/DK
VIDEO
TVID
AFT
H.PULSE
MONO
CN8101
SIF
LOUT
ROUT
LIN
RIN
CN1209
C3 OUT
Y3 OUT
L3 IN
R3 IN
V3 IN
MODE 3
Y3 OUT
C IN
Y IN
Y2 OUT
C2 OUT
L2 OUT
R2 OUT
R2 IN
L2 IN
MODE 2
V2 IN
TV R IN
V2 OUT
R1 OUT
TV L IN
MODE 1
V1 OUT
G
L1 OUT
BLK
B
TV Y IN
R
POFF
J903 R.G.B MULTI
CN8102
Y IN
C IN
SSCP
VIDEO
CN8109
C3 IN
R3 IN
Y3 IN
L3 OUT
L3 OUT
R3 OUT
V3 OUT
MODE3
Y3 IN
C OUT
Y OUT
Y2 IN
C2 IN
L2 IN
R2 IN
R2 OUT
L2 OUT
MODE2
TV V2 OUT
TV R OUT
Y2 IN
R1 IN
TV L OUT
MODE1
L1 IN
G
B
BLK
R
TV Y OUT
P.OFF
V IN
J (AUDIO/VIDEO I/O,RGB OUT)
CN1210
VARL
VARR
J291
H 1 (Y/C OUT,VIDEO OUT, AUDIO I/O,A/V SWITCH)
SW1 MODE
SW2 +
SW3 -
LC
FR R OUT
FR L OUT
FR V OUT
VIDEO
CN1008 (2/2)
CN 800 (1/2)
FR C OUT
FR Y OUT
HP L IN
HP R IN
HEAD PHONE
CN5108
FR Y IN
FR C IN
FR V IN
FR L IN
FR R IN
LC
P.OFF
CN8105

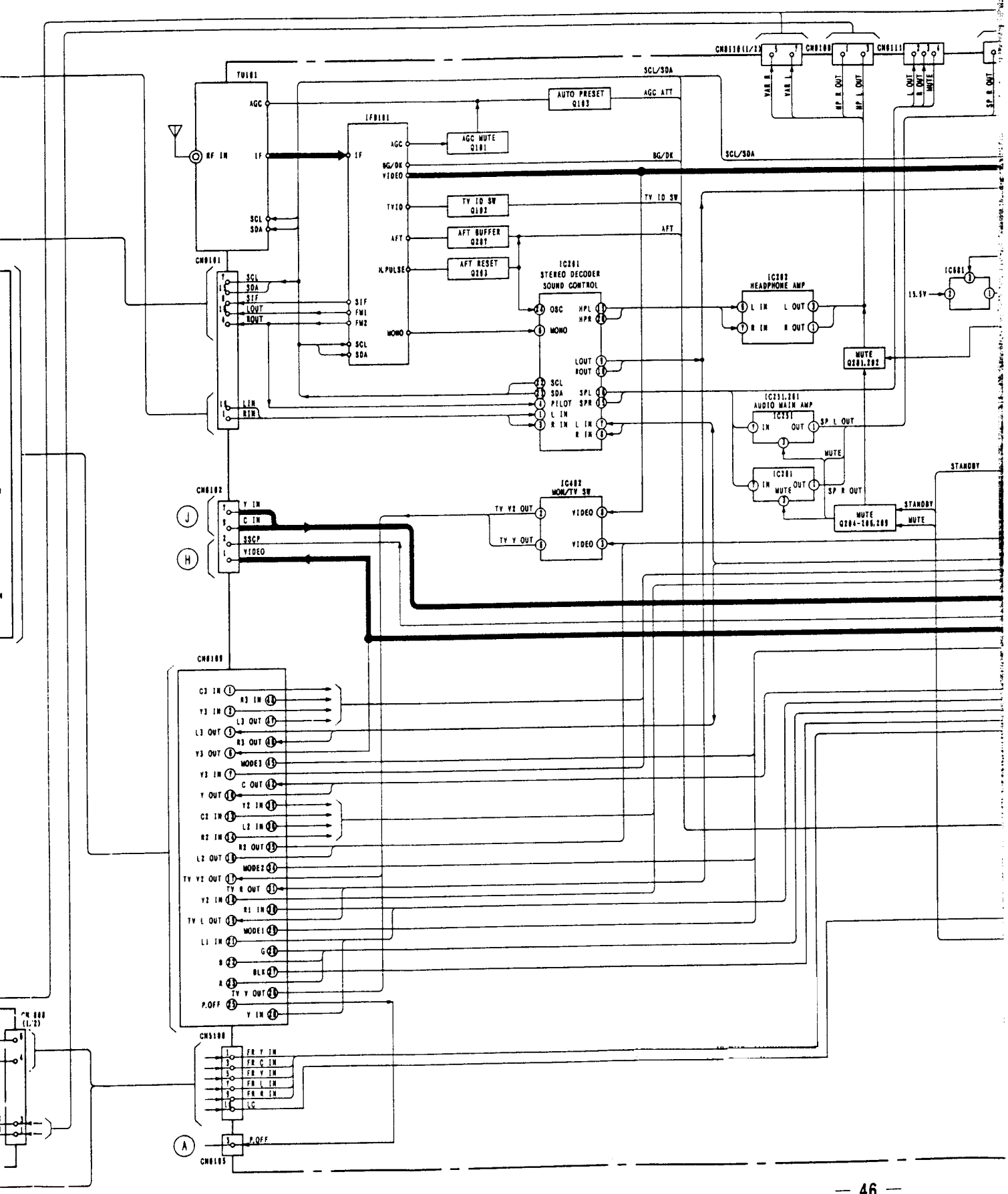
TU101
RF IN
IF
AGC
SCL
SDA
IF101
AGC
BG/DK
VIDEO
TVID
AFT
H.PULSE
MONO
SIF
FM1
FM2
SCL
SDA
AGC MUTE Q101
AUTO PRESET Q103
TV ID SW Q102
AFT BUFFER Q201
AFT RESET Q203
SCL/SDA
AGC ATT
BG/DK
TV ID SW
AFT
CN8101
SCL
SDA
SIF
LOUT
ROUT
LIN
RIN
IC201
STEREO DECODER
SOUND CONTROL
OSC
MONO
HPL
HPR
LOUT
ROUT
SCL
SDA
PILOT
L IN
R IN
SPL
SPR
L IN
R IN
IC202
HEADPHONE AMP
L IN
R IN
L OUT
R OUT
MUTE Q201,202
IC601
15.5V
IC231,261
AUDIO MAIN AMP
IC231
IN
OUT
SP L OUT
MUTE
IC261
IN
OUT
MUTE
SP R OUT
STANDBY
MUTE Q204-206,209
STANDBY
MUTE
CN8102
Y IN
C IN
SSCP
VIDEO
J
H
IC402
MON/TV SW
TV Y2 OUT
TV Y OUT
VIDEO
VIDEO
CN8109
C3 IN
Y3 IN
L3 OUT
L3 OUT
Y3 OUT
Y3 IN
Y OUT
C2 IN
R2 IN
L2 OUT
TV Y2 OUT
Y2 IN
TV L OUT
L1 IN
B
R
P.OFF
R3 IN
L3 OUT
R3 OUT
MODE3
C OUT
Y2 IN
L2 IN
R2 OUT
MODE2
TV R OUT
R1 IN
MODE1
G
BLK
TV Y OUT
Y IN
CN5108
FR Y IN
FR C IN
FR Y IN
FR L IN
FR R IN
LC
A
P.OFF
CN8105
CN8110(1/2)
CN8108
CN8111
VAR R
VAR L
HP R OUT
HP L OUT
L OUT
R OUT
MUTE
SP R OUT

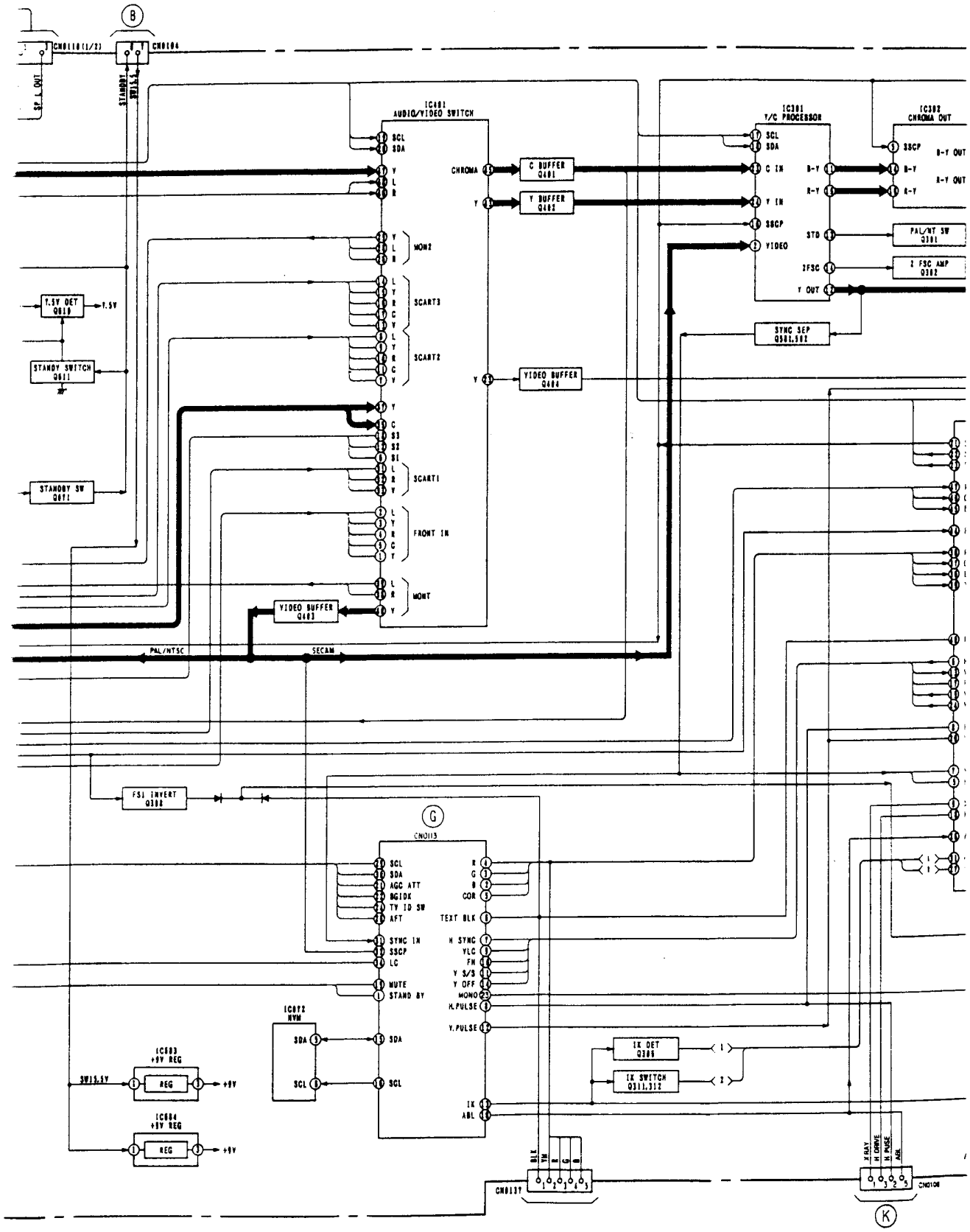
B
CN0118(1/2)
CN0104
SP L OUT
STANDBY
SW15.5V
IC481
AUDIO/VIDEO SWITCH
SCL
SDA
CHROMA
C BUFFER Q401
Y BUFFER Q402
MONI
SCART3
SCART2
SCART1
FRONT IN
MONI
VIDEO BUFFER Q404
VIDEO BUFFER Q403
PAL/NTSC
SECAM
7.5V DET Q819
7.5V
STANDBY SWITCH Q611
STANDBY SW Q671
FSI INVERT Q388
IC381
Y/C PROCESSOR
C IN
Y IN
SSCP
VIDEO
B-Y
R-Y
STD
2FSC
Y OUT
IC382
CHROMA OUT
B-Y OUT
R-Y OUT
PAL/NT SW Q381
2 FSC AMP Q382
SYNC SEP Q581,582
G
CN0113
AGC ATT
BGIDK
TV ID SW
AFT
SYNC IN
LC
MUTE
STAND BY
R
G
B
COR
TEXT BLK
H SYNC
VLC
FM
Y S/S
Y OFF
MONO
H.PULSE
V.PULSE
IX
ABL
IC672
NVM
IC683
+9V REG
REG
+9V
IC684
+9V REG
IX DET Q386
IX SWITCH Q311,312
BLK
YM
CN0137
Y RAY
H DRIVE
H PULSE
ABL
CN0106
K

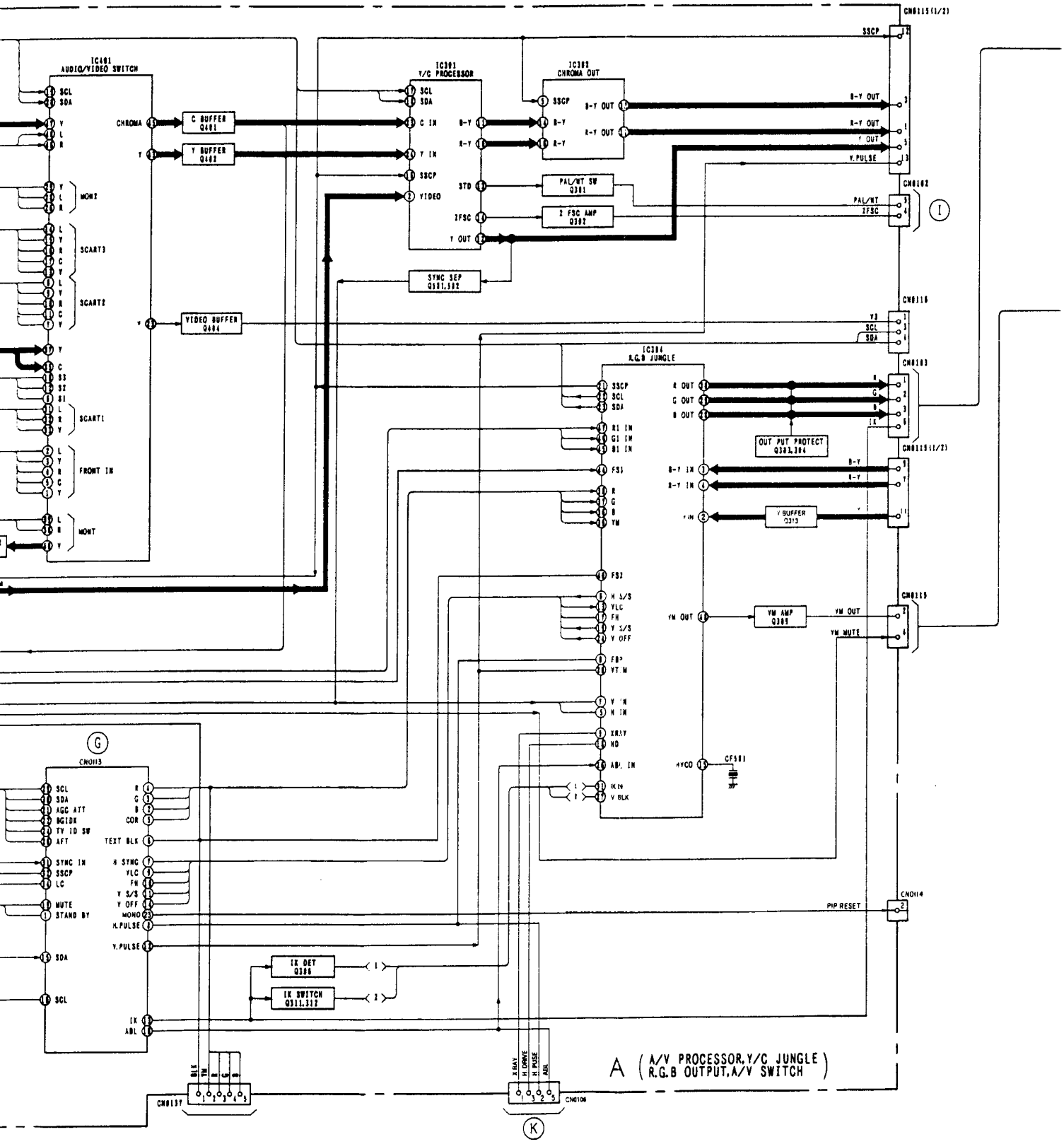
IC401
AUDIO/VIDEO SWITCH
C BUFFER Q401
Y BUFFER Q402
VIDEO BUFFER Q404
MONI
SCART3
SCART2
SCART1
FRONT IN
MONI
IC301
Y/C PROCESSOR
IC302
CHROMA OUT
PAL/NT SW Q301
2 FSC AMP Q302
SYNC SEP Q301,302
IC304
R.G.B JUNGLE
OUT PUT PROTECT Q303,304
Y BUFFER Q313
YM AMP Q305
CF501
CN0113
IX DET Q306
IX SWITCH Q311,312
CN0114
PIP RESET
CN0115(1/2)
CN0102
CN0116
CN0103
CN0115
CN0137
CN0106
A (A/V PROCESSOR,Y/C JUNGLE R.G.B OUTPUT,A/V SWITCH)

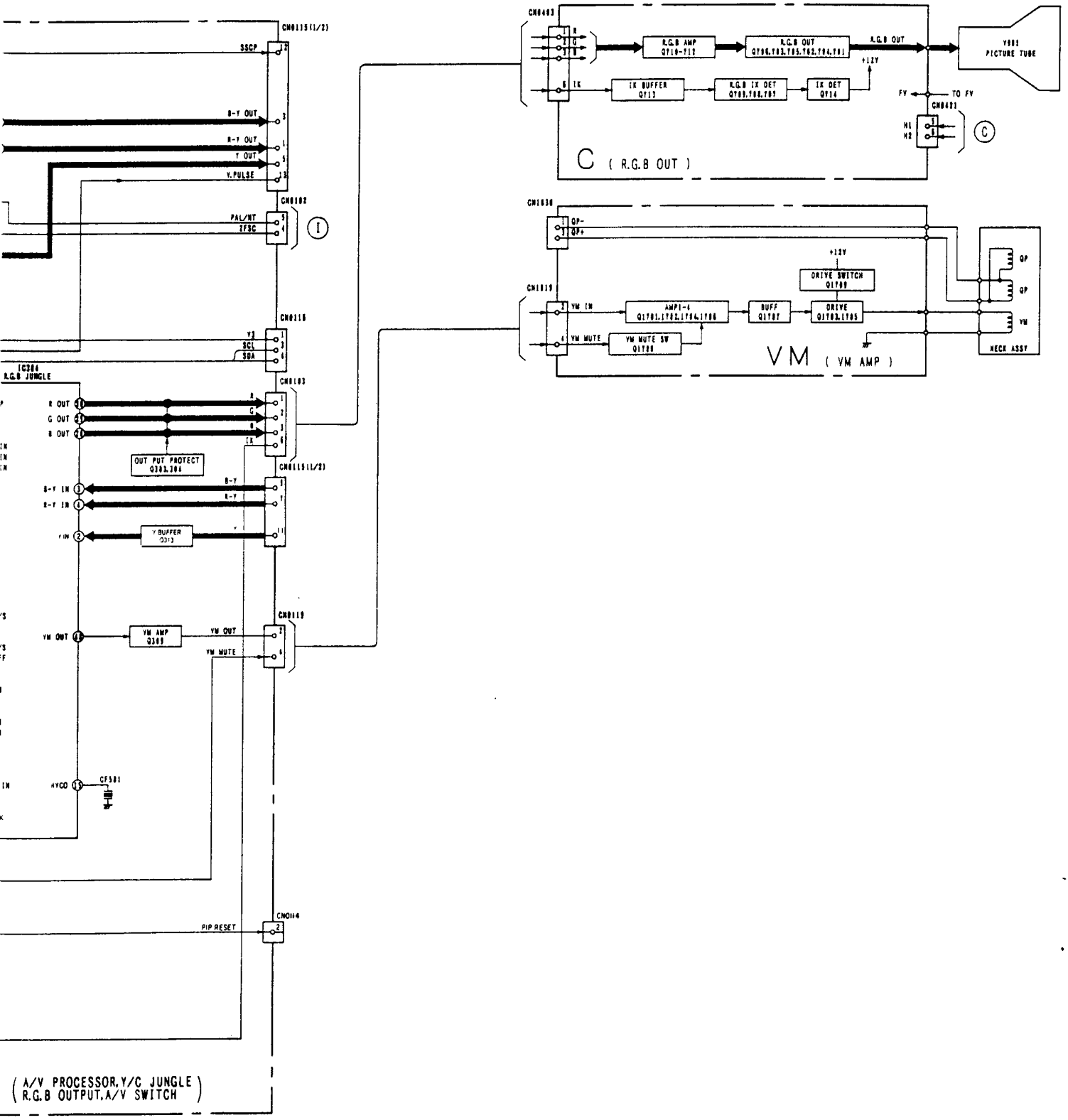
SSCP
B-Y OUT
R-Y OUT
Y OUT
Y.PULSE
PAL/NT
IFSC
Y3
SCL
SDA
IC304
R.G.B JUNGLE
R OUT
G OUT
B OUT
OUT PUT PROTECT
B-Y IN
R-Y IN
Y IN
Y BUFFER
VM OUT
VM AMP
VM MUTE
HVCO
PIP RESET
A/V PROCESSOR, Y/C JUNGLE
R.G.B OUTPUT, A/V SWITCH
R.G.B AMP
R.G.B OUT
IK
IK BUFFER
IK DET
+12V
FV
TO FV
H1
H2
C
C (R.G.B OUT)
QP-
QP+
VM IN
VM MUTE
AMP1-4
BUFF
DRIVE SWITCH
DRIVE
VM MUTE SW
VM
VM (VM AMP)
NECK ASSY
PICTURE TUBE

5-2. CIRCUIT BOARDS LOCATION

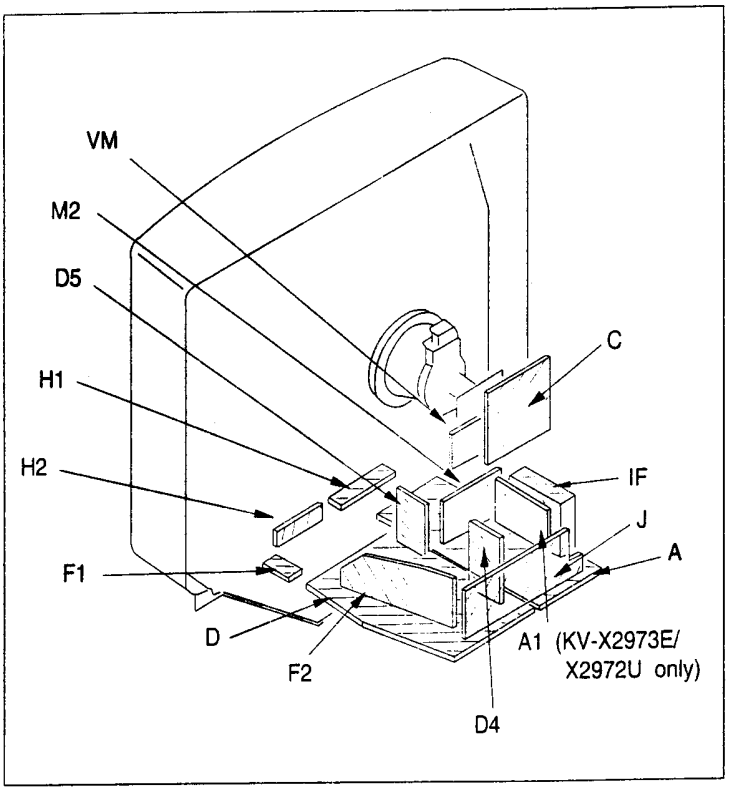

Reference information

RESISTOR	RN	: METAL FILM
	RC	: SOLID
	FPRD	: NONFLAMMABLE CARBON
	FUSE	: NONFLAMMABLE FUSIBLE
	RS	: NONFLAMMABLE METAL OXIDE
	RB	: NONFLAMMABLE CEMENT
	RW	: NONFLAMMABLE WIREWOUND
	※	: ADJUSTMENT RESISTOR
COIL	LF-8L	: MICRO INDUCTOR
CAPACITOR	TA	: TANTALUM
	PS	: STYROL
	PP	: POLYPROPYLENE
	PT	: MYLAR
	MPS	: METALIZED POLYESTER
	MPP	: METALIZED POLYPROPYLENE
	ALB	: BIPOLAR
	ALT	: HIGH TEMPERATURE
	ALR	: HIGH RIPPLE

Note: The components identified by shading and mark ⚠ are critical for safety. Replace only with part number specified.

Note: Les composants identifiés par une trame et par une marque ⚠ sont d'une importance critique pour la sécurité. Ne les remplacer que par des pièces de numéro spécifié.

5-3. SCHEMATIC DIAGRAMS AND PRINTED WIRING BOARDS

Note :

- All capacitors are in μF unless otherwise noted. pF : μμF 50WV or less are not indicated except for electrolytic.
- Indication of resistance, which dose not have one for rating electrical power, is as follows.

Pitch : 5mm
Rating electrical power : ¼W

- Chip resistor is in 1/10W.
- All resistors are in ohms. kΩ = 1000Ω, MΩ = 1000KΩ
- : nonflammable resistor.
- : fusible resistor.
- Δ : internal component.
- ▭ : panel designation or adjustment for repair.
- All variable and adjustable resistors have charactristic curve B, unless otherwise noted.
- All voltages are in V.
- Readings are taken with a 10MΩ digital multimeter.
- Readings are taken with a color-bar signal input.
- Voltage variations may be noted due to normal production tolerances.
- ▬▬ : B + bus.
- ▬ ▬ : B − bus.
- : signal path.(RF)
- ⏚ : earth - ground
- ⏚ : earth - chassis

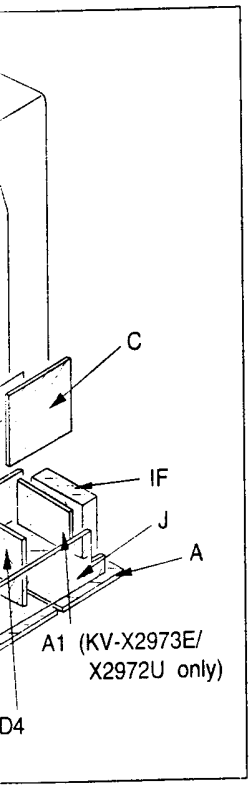

ED WIRING BOARDS

curve B.

Reference information

RESISTOR	RN	: METAL FILM
	RC	: SOLID
	FPRD	: NONFLAMMABLE CARBON
	FUSE	: NONFLAMMABLE FUSIBLE
	RS	: NONFLAMMABLE METAL OXIDE
	RB	: NONFLAMMABLE CEMENT
	RW	: NONFLAMMABLE WIREWOUND
	※	: ADJUSTMENT RESISTOR
COIL	LF-8L	: MICRO INDUCTOR
CAPACITOR	TA	: TANTALUM
	PS	: STYROL
	PP	: POLYPROPYLENE
	PT	: MYLAR
	MPS	: METALIZED POLYESTER
	MPP	: METALIZED POLYPROPYLENE
	ALB	: BIPOLAR
	ALT	: HIGH TEMPERATURE
	ALR	: HIGH RIPPLE

Note: The components identified by shading and mark ⚠ are critical for safety. Replace only with part number specified.

Note: Les composants identifiés par une trame et par une marque ⚠ sont d'une importance critique pour la sécurité. Ne les remplacer que par des pièces de numéro spécifié.

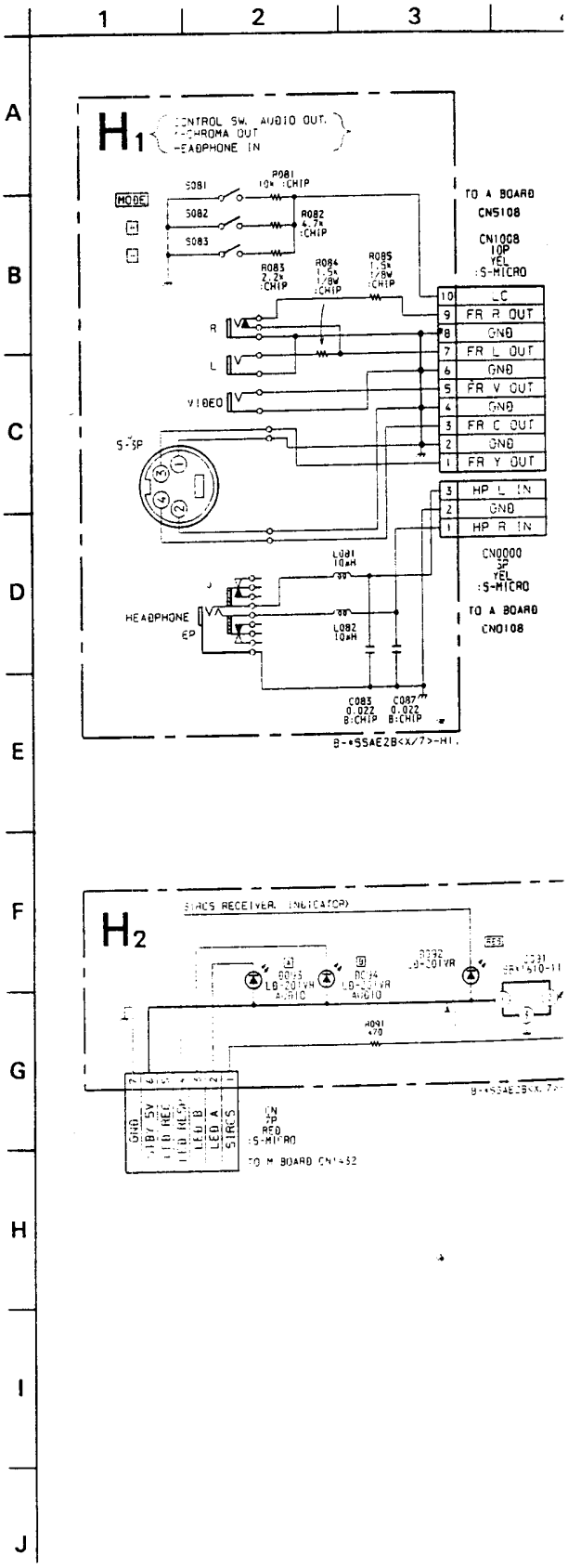

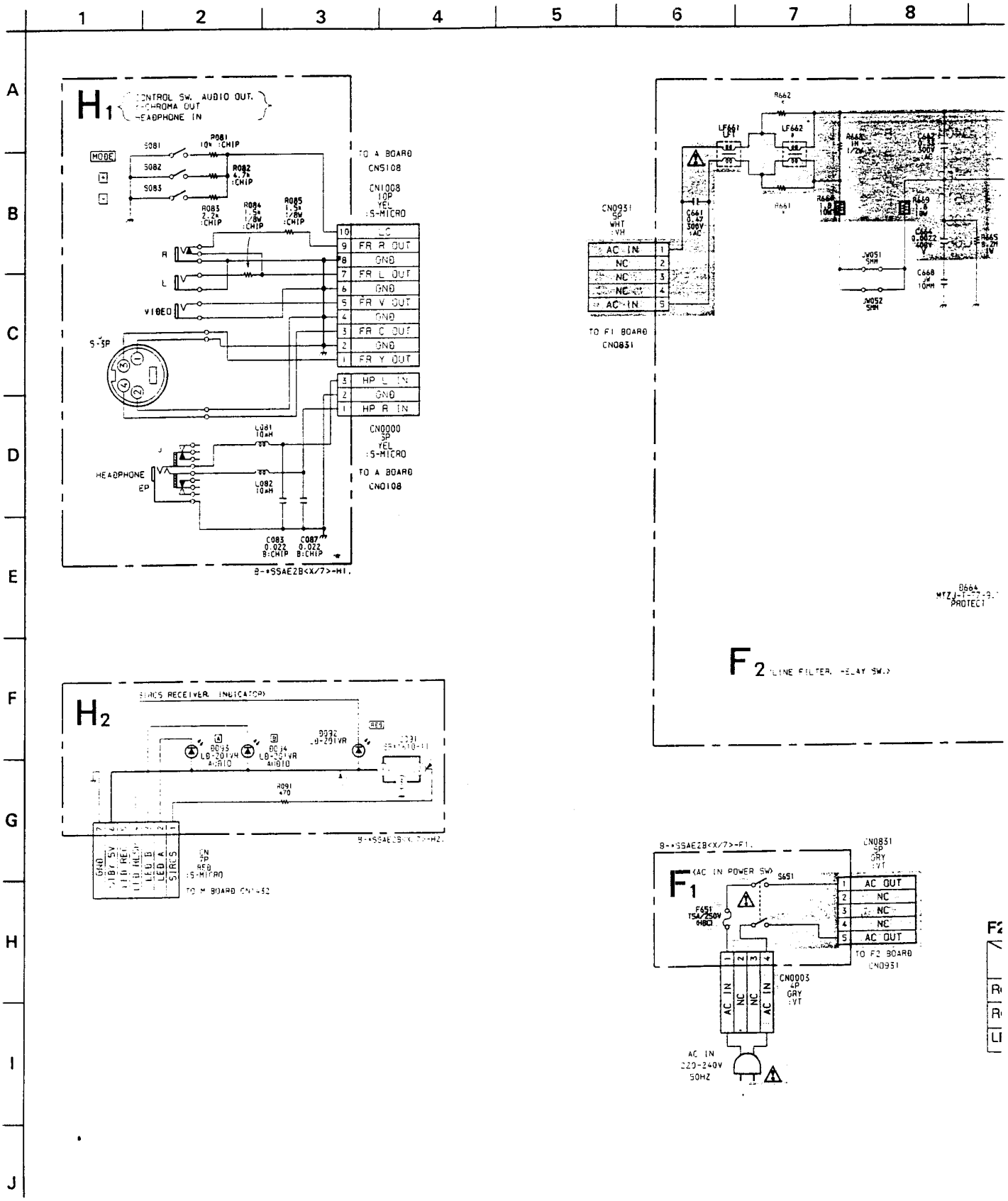
H1
CONTROL SW. AUDIO OUT.
CHROMA OUT
HEADPHONE IN
MODE
S081
S082
S083
R081 10k :CHIP
R082 4.7k :CHIP
R083 2.2k :CHIP
R084 1.5k 1/8W :CHIP
R085 1.5k 1/8W :CHIP
TO A BOARD CN5108
CN1008 10P YEL :S-MICRO
10 LC
9 FR R OUT
8 GND
7 FR L OUT
6 GND
5 FR V OUT
4 GND
3 FR C OUT
2 GND
1 FR Y OUT
R
L
VIDEO
S-SP
HP L IN
GND
HP R IN
CN0000 5P YEL :S-MICRO
TO A BOARD CN0108
L081 10uH
L082 10uH
HEADPHONE
EP
C083 0.022 B:CHIP
C087 0.022 B:CHIP
B-*SSAE2B<X/7>-H1.
H2
SIRCS RECEIVER INDICATOR
D092 LD-201VR
D093 LD-201VR
D094 LD-201VR
R091 470
GND
+B(5V)
HEAT
LED B
LED A
SIRCS
CN 5P RED :S-MICRO
TO M BOARD CN1-52
B-*SSAE2B<X/7>-H2.
R662
LF661
LF662
R661
R663 1M 1/2W
C662 0.33 500V :AC
R669 1.5 3W
C661 0.47 300V :AC
C664 0.0022 400V
R665 8.2M 1/2W
CN0931 5P WHT :VH
AC IN
NC
NC
NC
AC IN
TO F1 BOARD CN0831
JW051 5MM
JW052 5MM
C668 10MM
D664 MTZJ-T-77-9.1 PROTECT
F2 (LINE FILTER, RELAY SW.)
B-*SSAE2B<X/7>-F1.
F1 (AC IN POWER SW)
S651
F651 T5A/250V 0HBC
CN0831 5P GRY :VT
1 AC OUT
2 NC
3 NC
4 NC
5 AC OUT
TO F2 BOARD CN0931
CN0003 4P GRY :VT
AC IN
NC
NC
AC IN
AC IN 220-240V 50HZ

H1 [CONTROL SW, A
Y - CHROMA OU

8 | 9 | 10 | 11 | 12 | 13

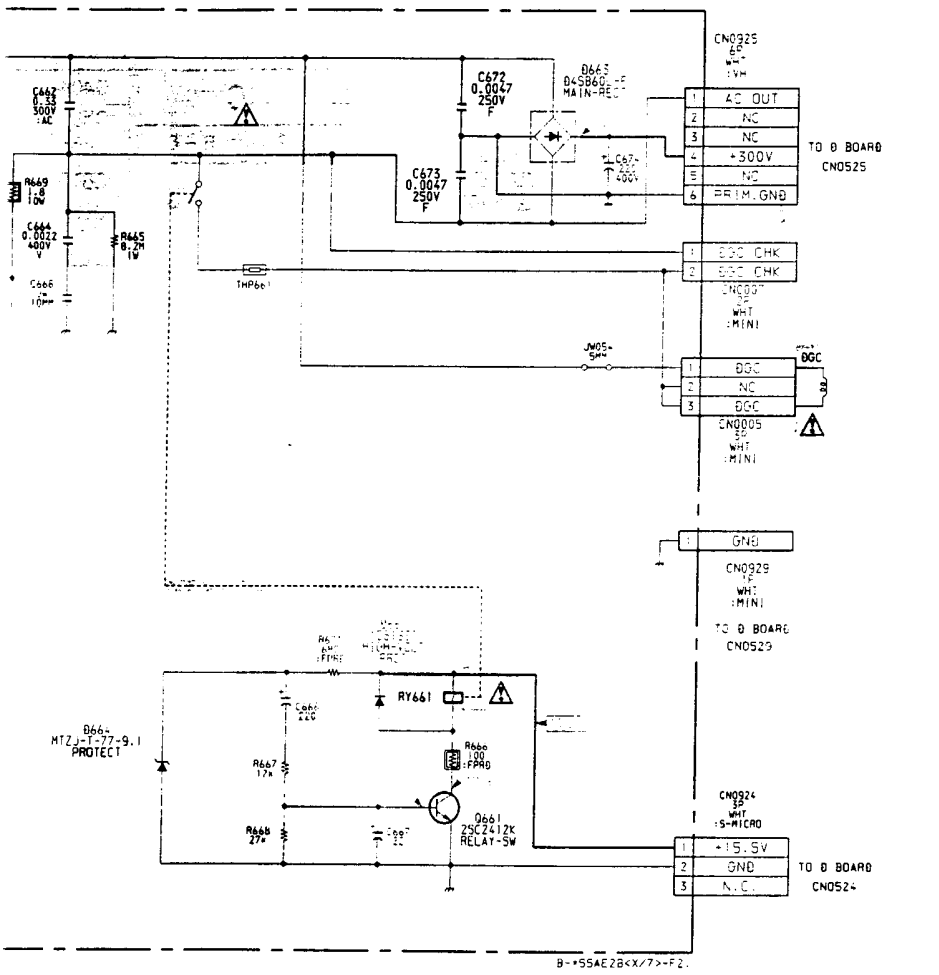

- H1 BOARD -

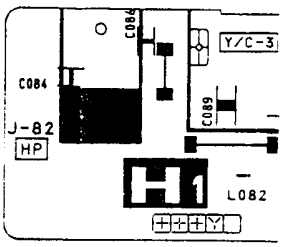

- H2 BOARD -

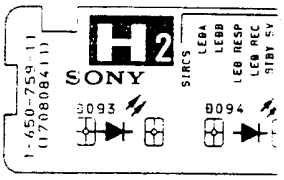

- F2 BOARD -

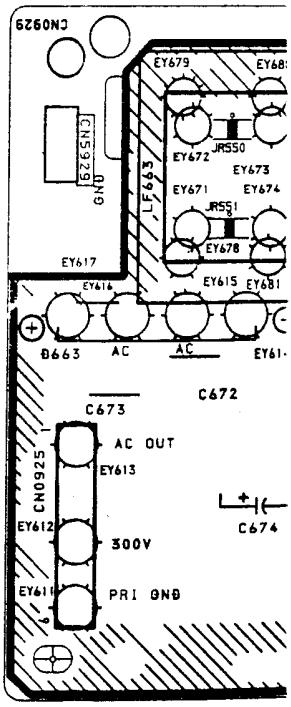

F2 BOARD * MARK

Model	KV-X2971A	KV-X2971B	KV-X2971D	KV-X2971K	KV-X2973E	KV-X2972U
R661	-	JW 10MM	-	-	JW 10MM	JW 10MM
R662	-	JW 10MM	-	-	JW 10MM	JW 10MM
LF662	LFT	-	LFT	LFT	-	-

8 | 9 | 10 | 11 | 12 | 13

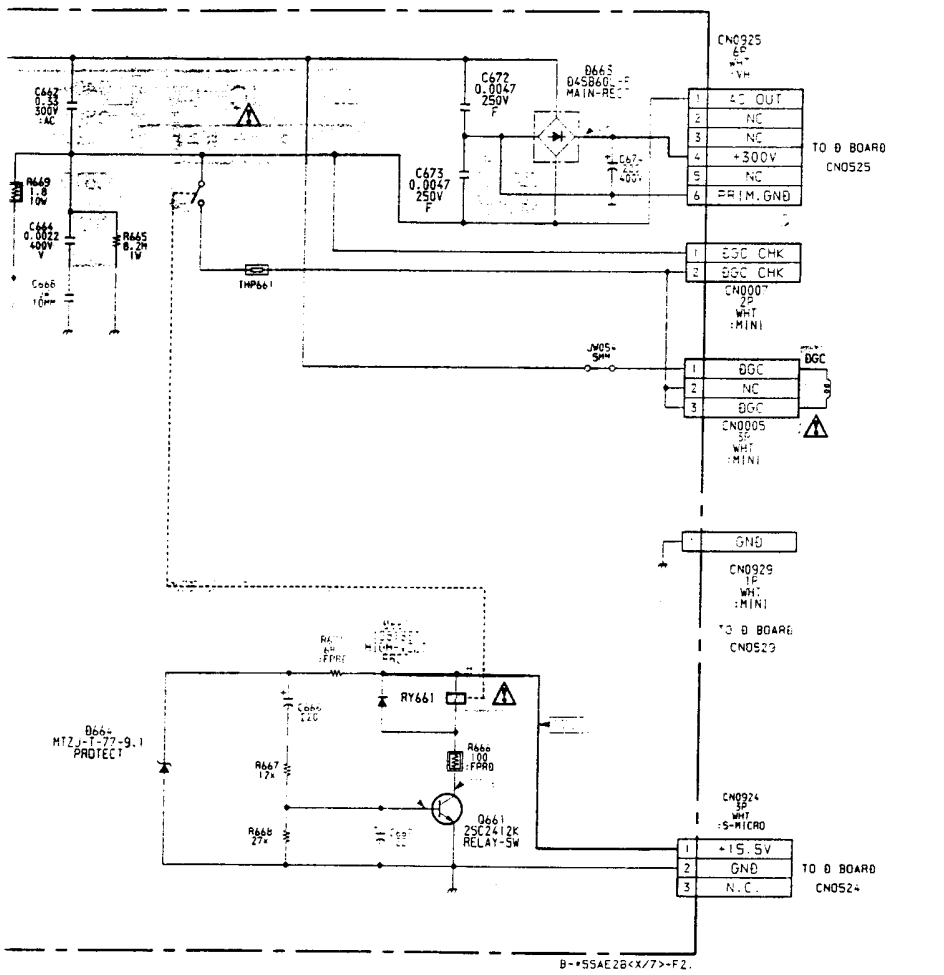

H1 [CONTROL SW, A
Y - CHROMA OU

– H1 BOARD –

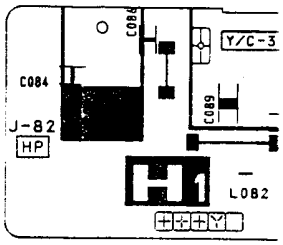

– H2 BOARD –

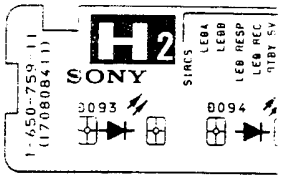

– F2 BOARD –

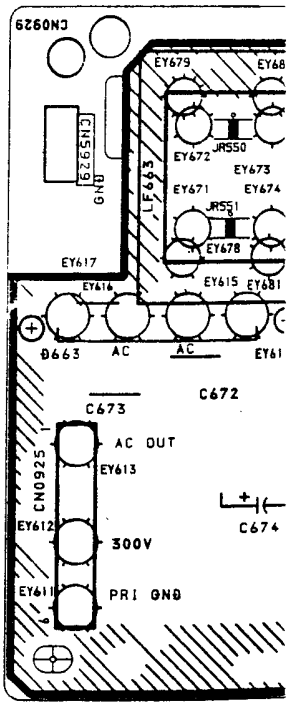

F2 BOARD * MARK

Model	KV-X2971A	KV-X2971B	KV-X2971D	KV-X2971K	KV-X2973E	KV-X2972U
R661	-	JW 10MM	-	-	JW 10MM	JW 10MM
R662	-	JW 10MM	-	-	JW 10MM	JW 10MM
LF662	LFT	-	LFT	LFT	-	-

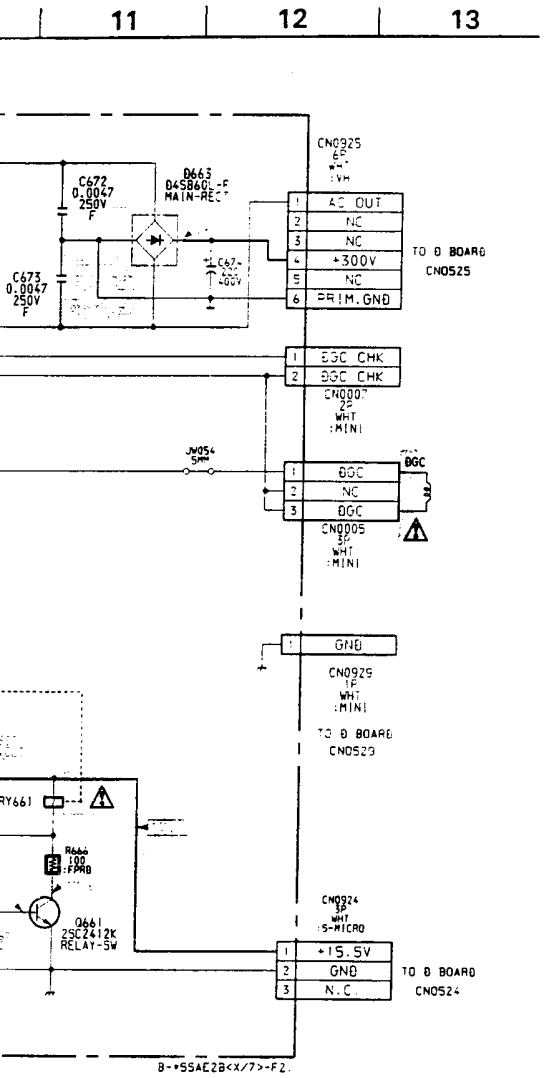

V-X2971B	KV-X2971D	KV-X2971K	KV-X2973E	KV-X2972U
W 10MM	-	-	JW 10MM	JW 10MM
W 10MM	-	-	JW 10MM	JW 10MM
-	LFT	LFT	-	-

H1 [CONTROL SW, AUDIO OUT / Y – CHROMA OUT, HEADPHONE] **H2** [SIRCS RECEIVE INDICATOR]

– H1 BOARD –

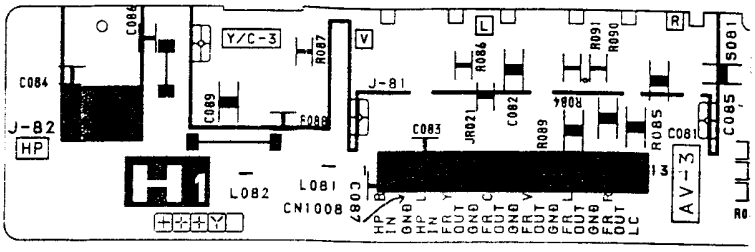

– H2 BOARD –

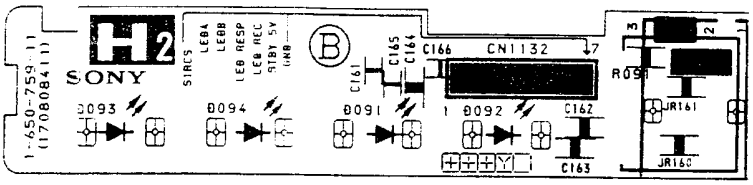

– F2 BOARD –

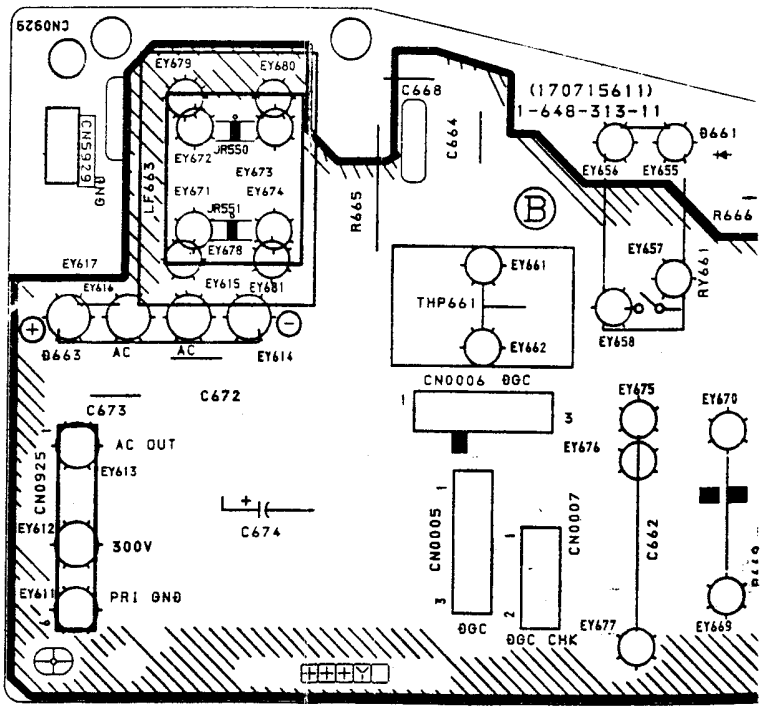

DIO OUT
HEADPHONE] **H2** [SIRCS RECEIVE
INDICATOR] **F2** [LINE FILTER,
RELAY SW] **F1** [AC IN POWER SW]

– F1 BOARD –

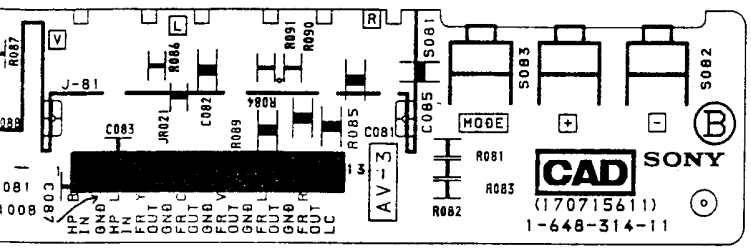

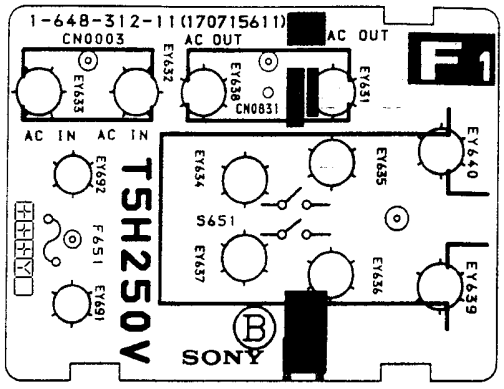

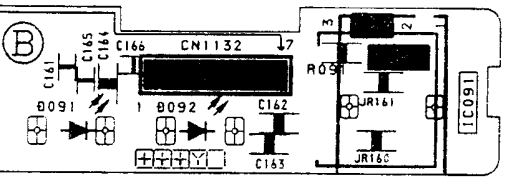

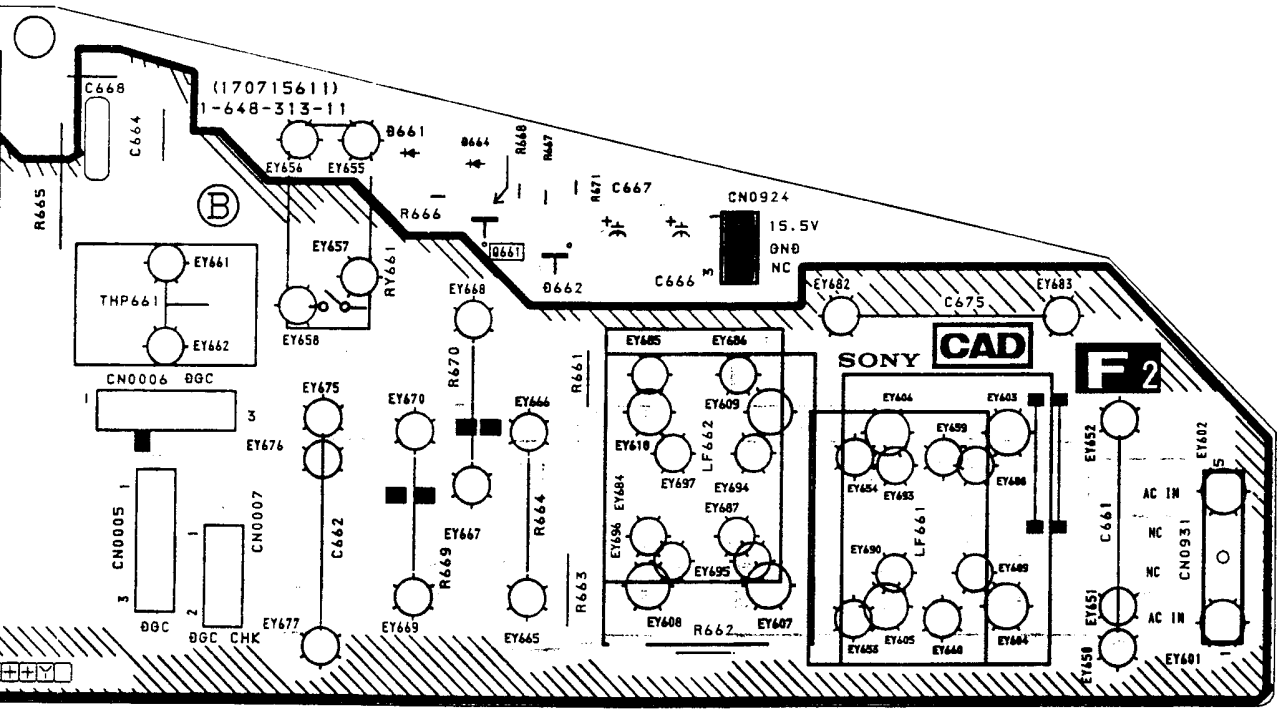

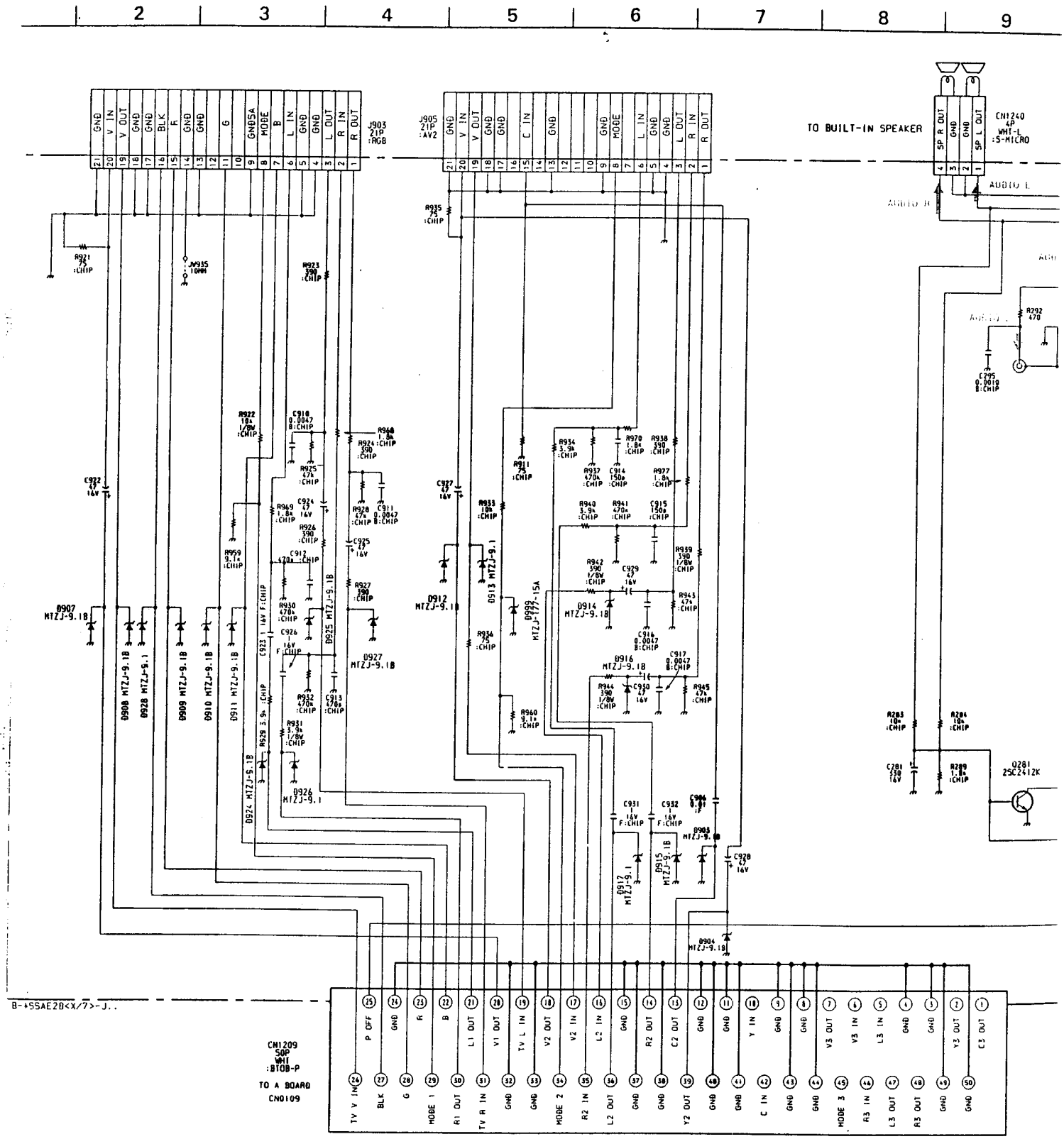
2
3
4
5
6
7
8
9
J903
21P
:RGB
J905
21P
:AV2
TO BUILT-IN SPEAKER
CN1240
6P
WHT-L
:S-MICRO
CN1209
50P
WHT
:BTOB-P
TO A BOARD
CN0109
Q281
2SC2412K
B-*5SAE28<X/7>-J..

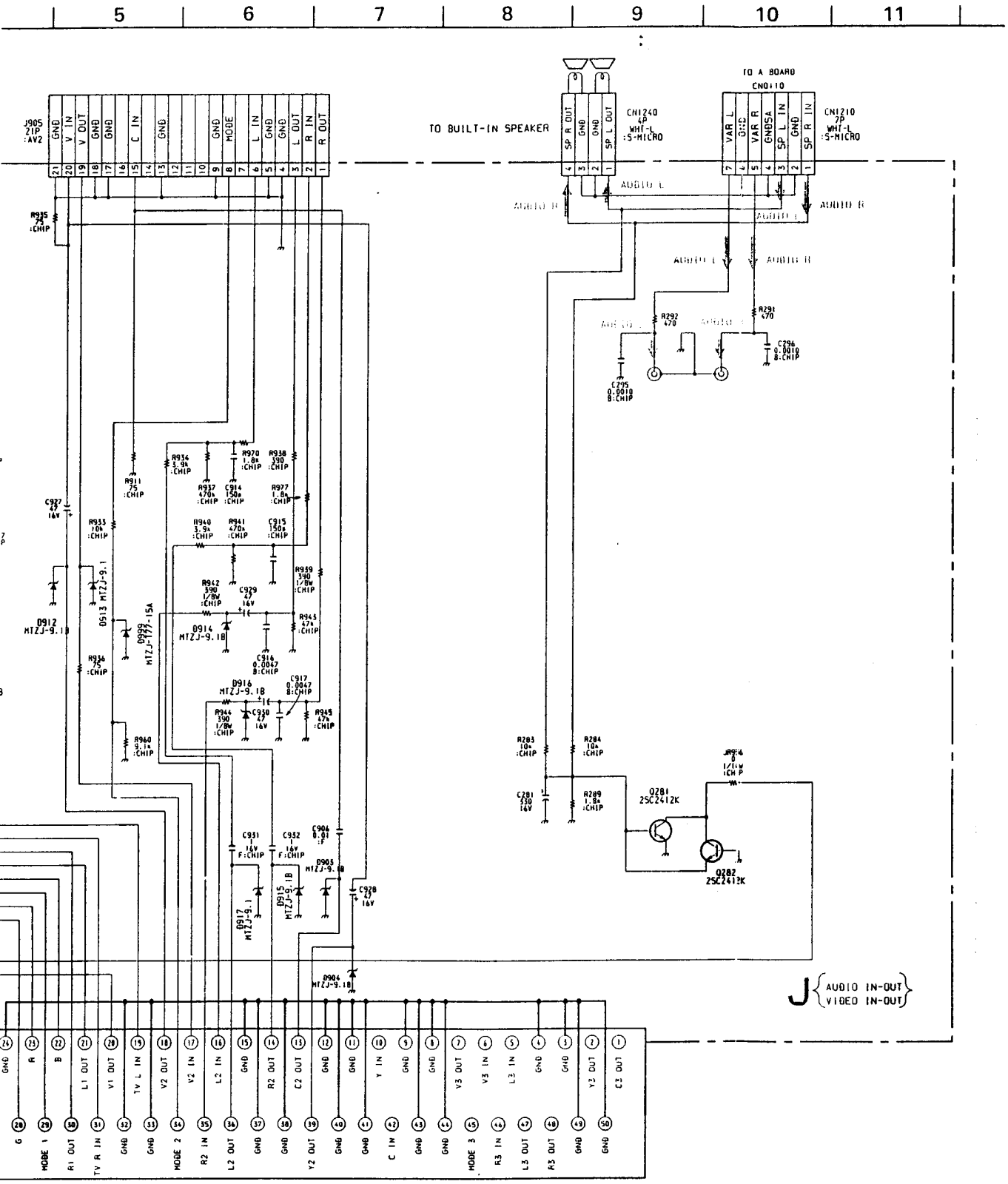

Note :

- : Pattern from the side which enables seeing.
- : Pattern of the rear side.

J [AUDIO IN/OUT / VIDEO IN/OUT] **A** [TUNER, AUDIO, CONTROL, AUDIO AMP, AV SW, R.G.B JUNGLE, Y/C PROCESSOR]

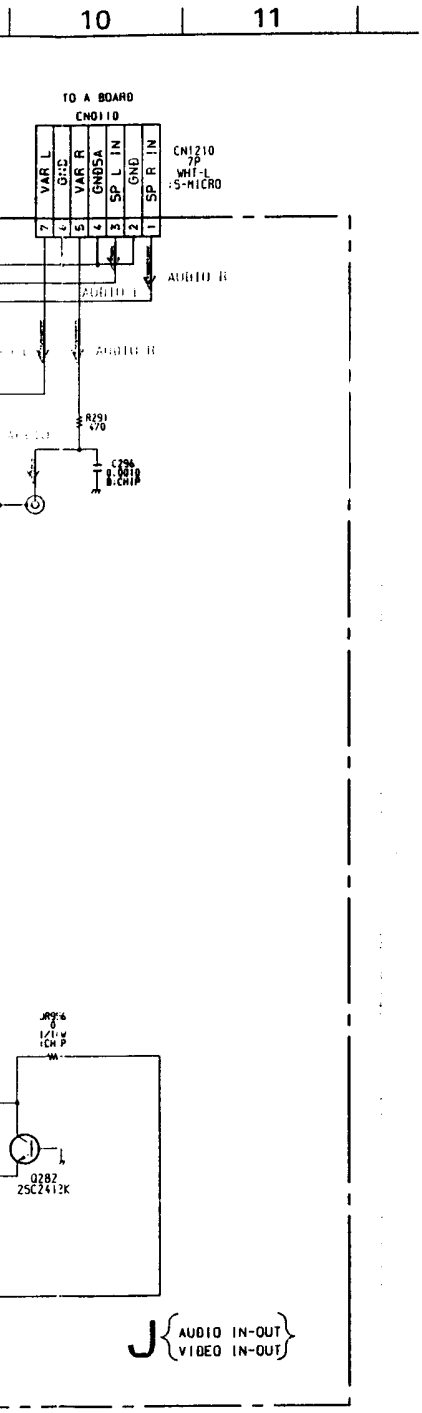

– J BOARD –

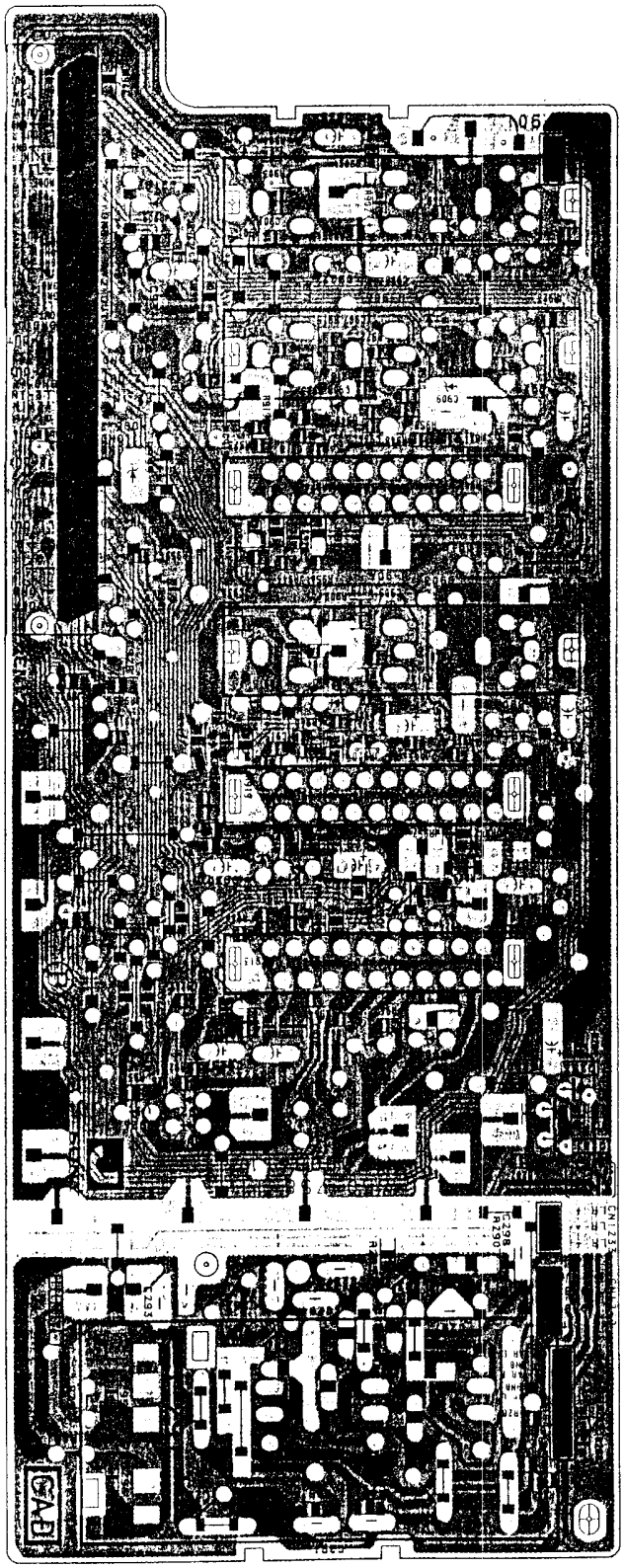

IC	
IC072	B – 6
IC201	C – 6
IC202	C – 4
IC251	D – 4
IC261	D – 2
IC301	A – 8
IC302	A – 10
IC304	C – 10
IC401	C – 2
IC402	D – 2
IC681	D – 9
IC684	C – 4
IC685	E – 8

TRANSISTOR	
Q071	D – 8
Q101	A – 3
Q102	A – 7
Q103	A – 3
Q201	D – 5
Q202	D – 5
Q203	A – 4
Q204	D – 3
Q205	E – 2
Q206	D – 2
Q207	B – 6
Q209	E – 7
Q210	A – 6
Q301	A – 7
Q302	B – 7
Q303	D – 10
Q304	D – 10
Q305	A – 8
Q306	D – 10
Q308	C – 9
Q309	C – 9
Q311	C – 8
Q312	C – 8
Q313	B – 8
Q314	C – 7
Q315	D – 7
Q401	C – 2
Q402	C – 2
Q403	C – 2

Note :

- : Pattern from the side which enables seeing.
- : Pattern of the rear side.

– A BOARD –

Q404	B – 3
Q581	B – 9
Q582	B – 9
Q610	E – 9
Q681	E – 7
Q682	D – 9

DIODE

D068	B – 7
D069	A – 1
D071	A – 1
D073	A – 1
D075	A – 1
D077	B – 7
D078	B – 7
D079	B – 7
D101	B – 2
D206	D – 7
D207	E – 7
D208	D – 7
D209	D – 3
D210	D – 3
D211	E – 5
D212	E – 4
D213	D – 5
D214	C – 6
D301	B – 9
D302	A – 9
D304	B – 10
D305	C – 9
D306	D – 10
D307	D – 10
D308	D – 10
D311	C – 9
D312	C – 8
D313	C – 7
D381	C – 8
D401	B – 1
D403	B – 1
D405	A – 1
D406	B – 2
D407	B – 2
D571	B – 9
D681	E – 8
D683	D – 9

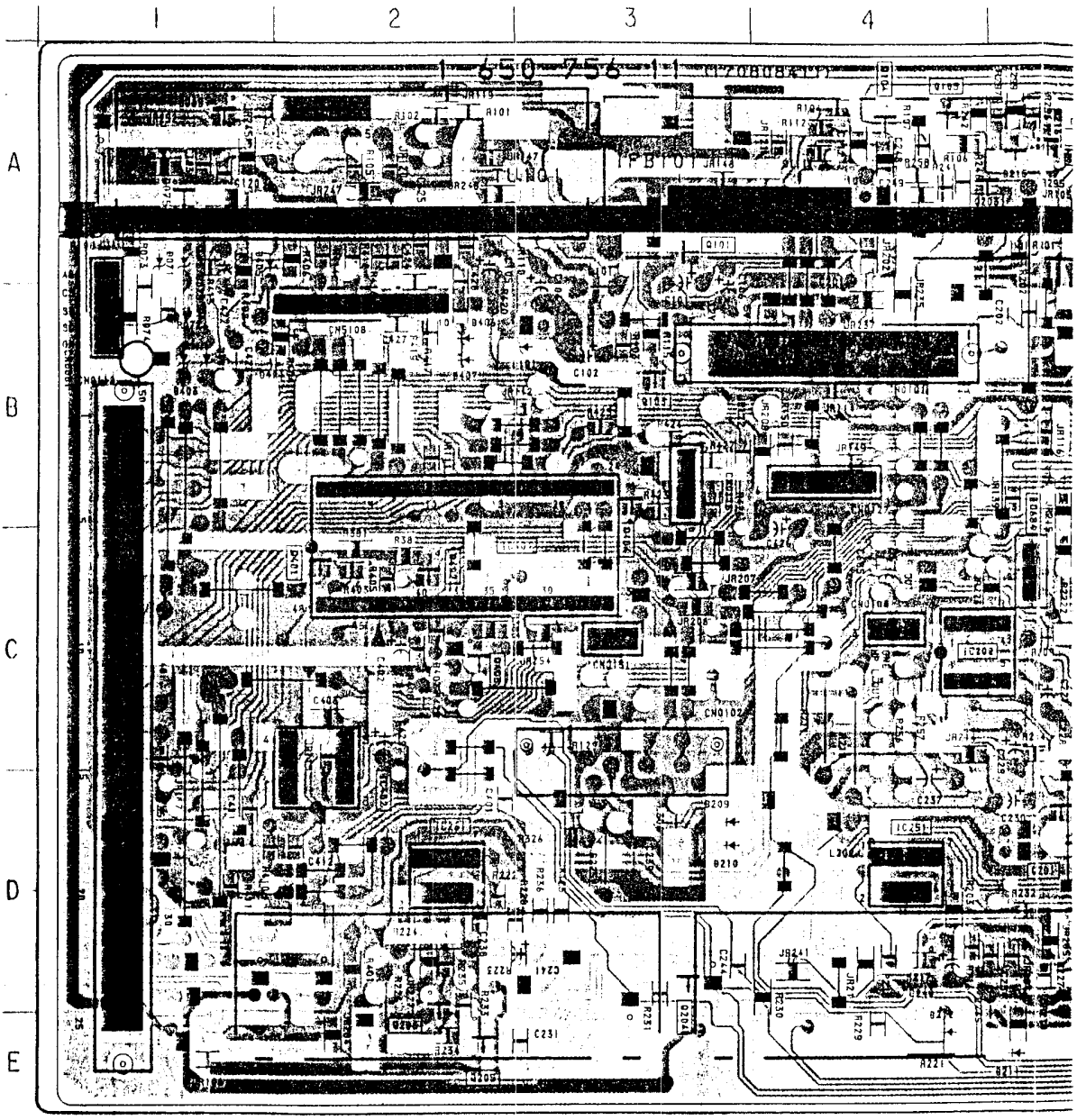

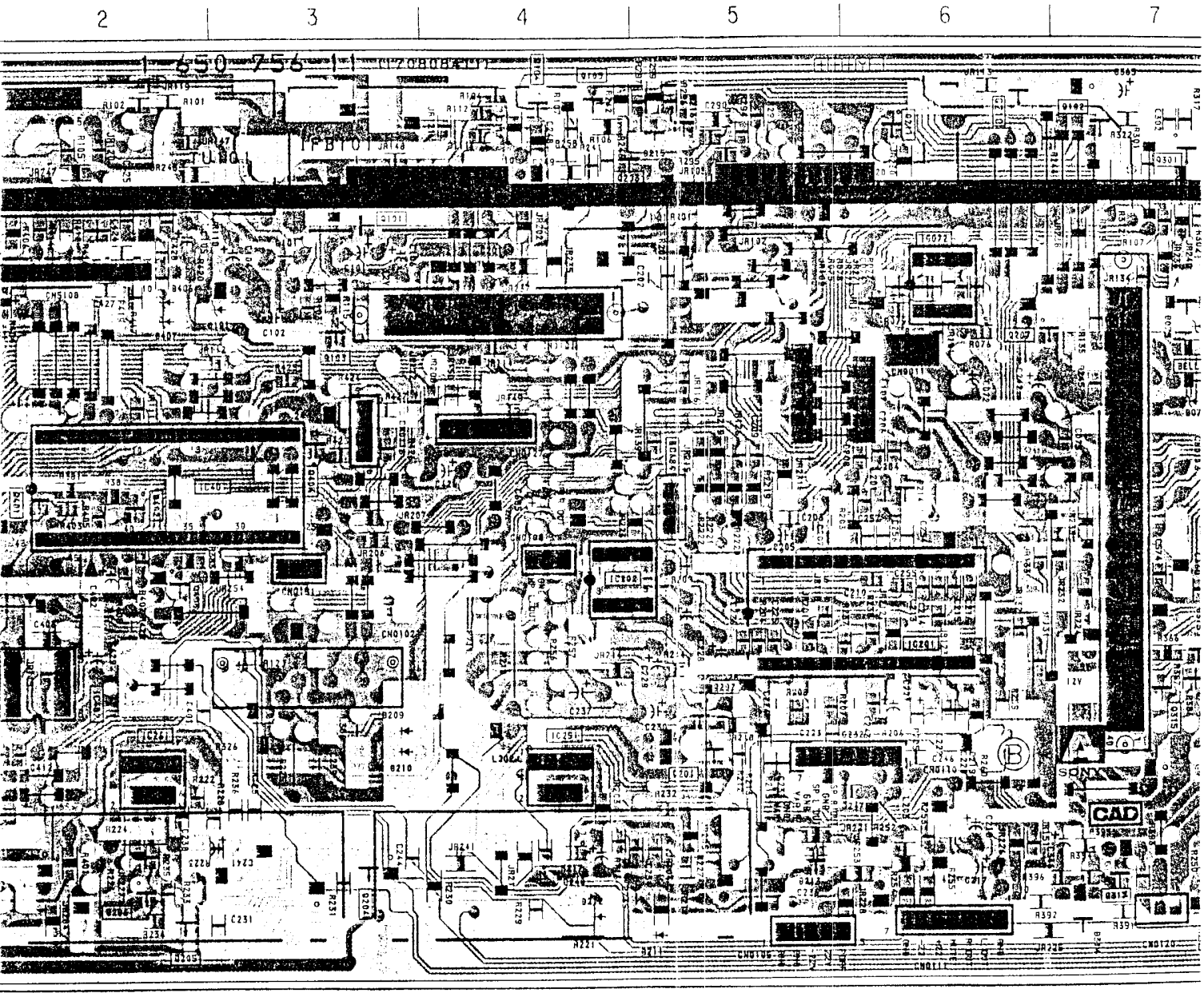
2
3
4
5
6
7
1-650-756-11
SONY
CAD

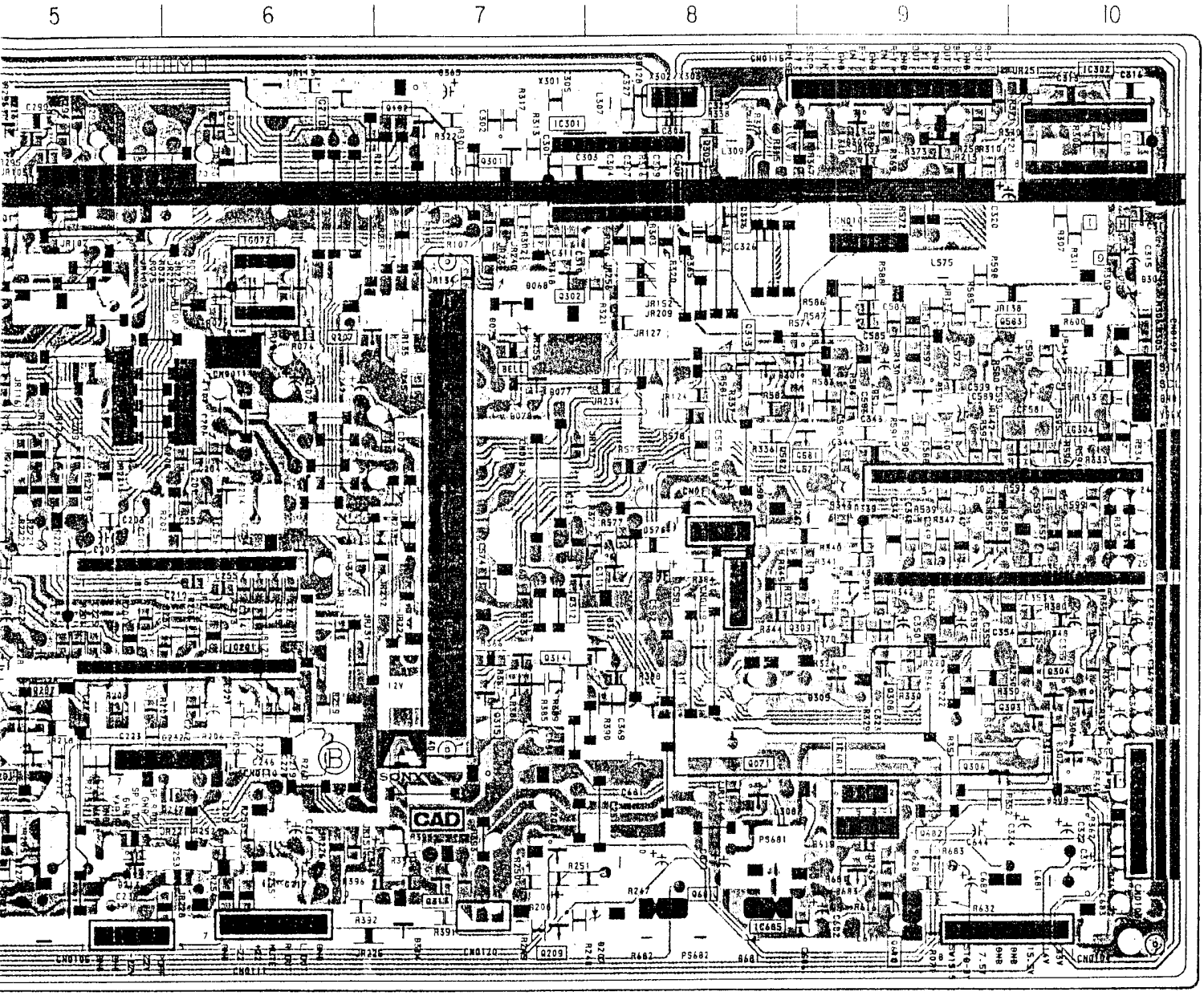

Note :

- : Pattern from the side which enables seeing.
- : Pattern of the rear side.

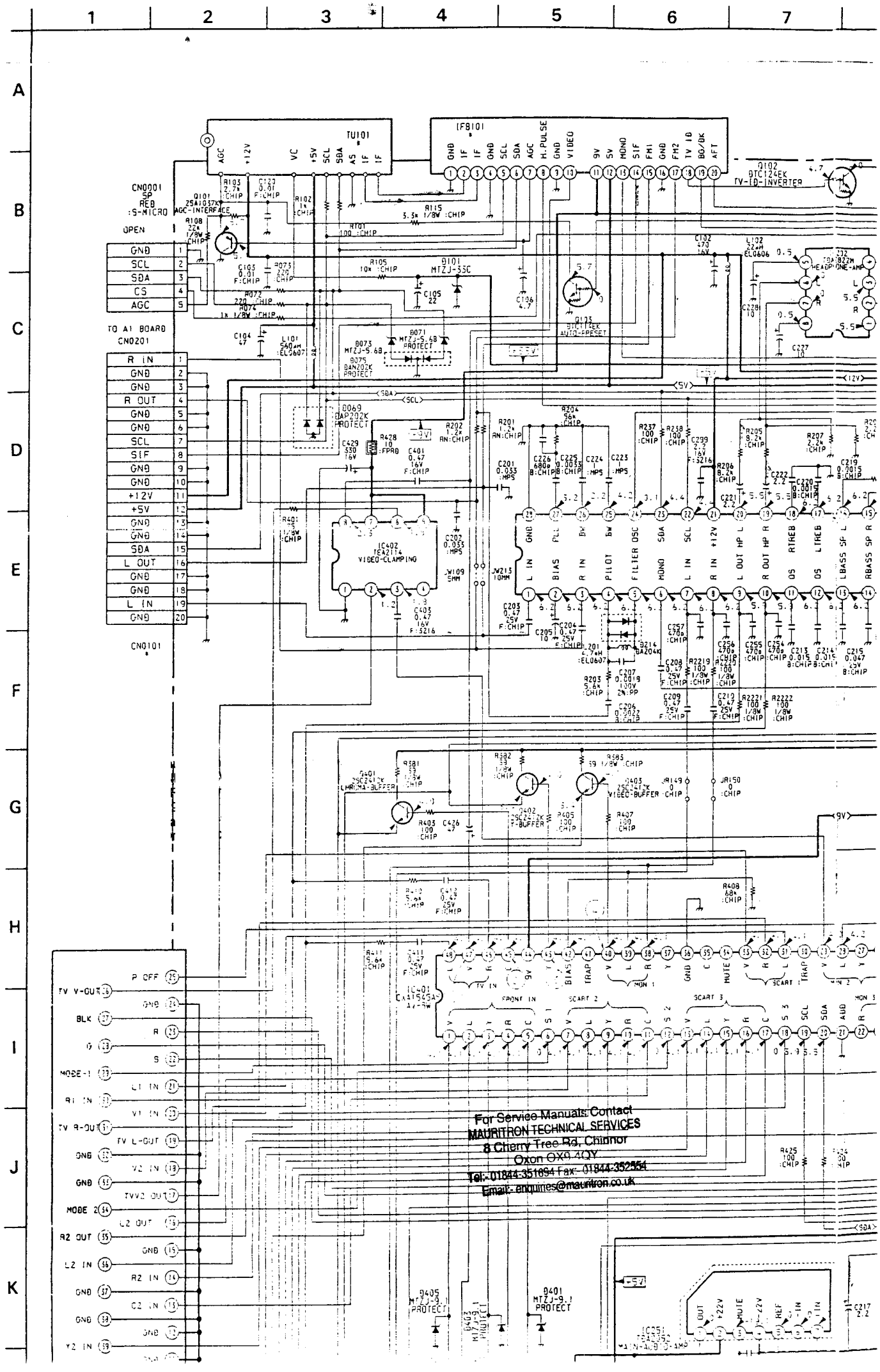

For Service Manuals Contact
MAURITRON TECHNICAL SERVICES
8 Cherry Tree Rd, Chinnor
Oxon OX9 4QY
Tel:- 01844-351694 Fax:- 01844-352554
Email:- enquiries@mauritron.co.uk

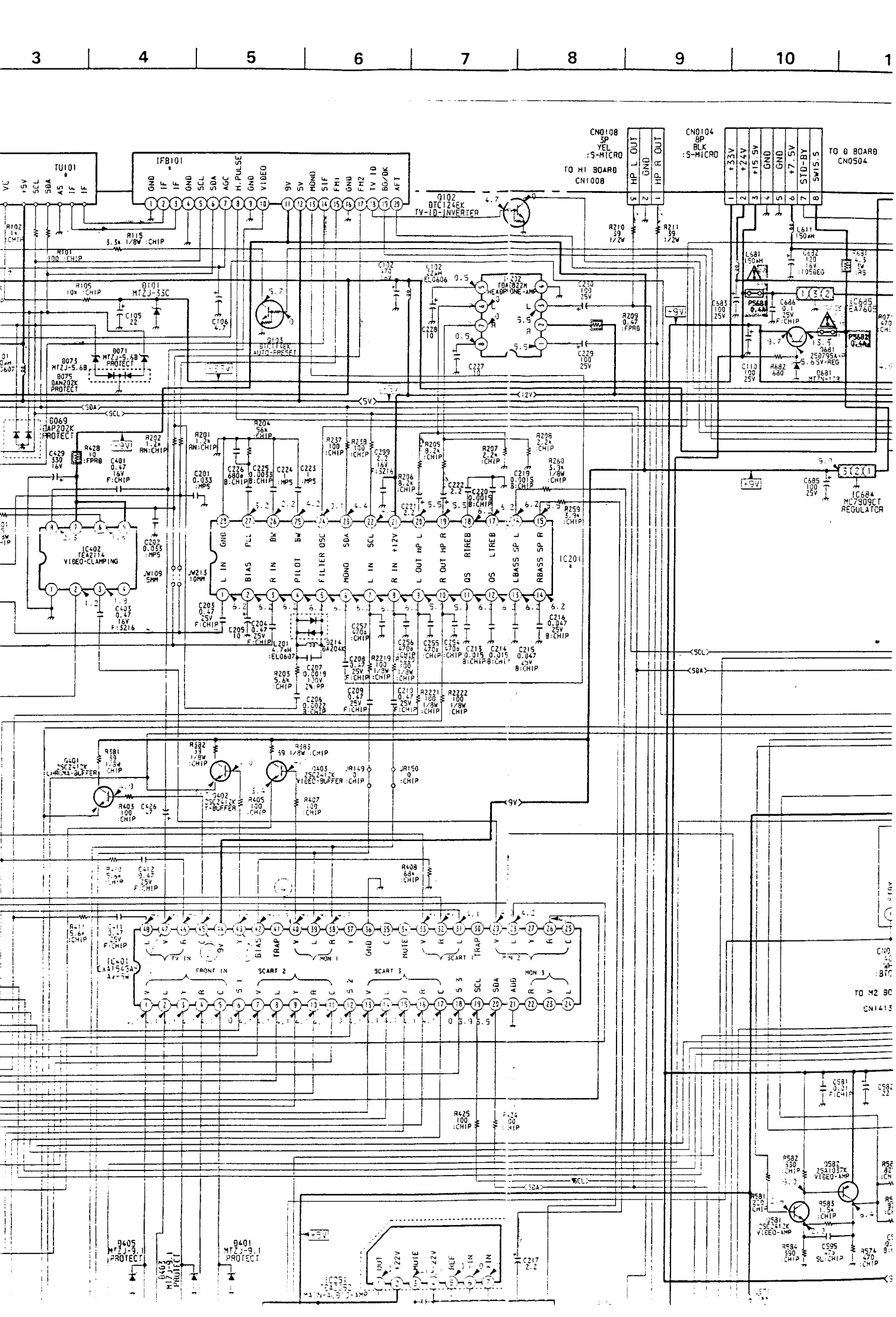
3
4
5
6
7
8
9
10
TU101
IFB101
CN0108
3P
YEL
:S-MICRO
TO HI BOARD
CN1008
HP L OUT
GND
HP R OUT
CN0104
8P
BLK
:S-MICRO
+33V
+24V
+15.5V
GND
GND
+7.5V
STD-BY
SW15.5
TO B BOARD
CN0504
Q102
BTC124EK
TV-IO-INVERTER
Q101
MTZJ-33C
Q103
BTC124EK
AUTO-PRESET
IC232
TDA2822M
HEADPHONE-AMP
IC695
EA7605
IC684
MC7909CT
REGULATOR
IC602
TEA2114
VIDEO-CLAMPING
IC201
IC401
CXA1543AS
Q401
2SC2412K
CHROMA-BUFFER
Q402
2SC2412K
Y-BUFFER
Q403
2SC2412K
VIDEO-BUFFER
Q582
2SA1037K
VIDEO-AMP
Q581
2SC2412K
VIDEO-AMP
Q405
MTZJ-9.1
PROTECT
Q401
MTZJ-9.1
PROTECT
Q403
MTZJ-9.1
PROTECT
IC251
BA5532
MAIN-AUDIO-AMP
TO M2 BO
CN1413

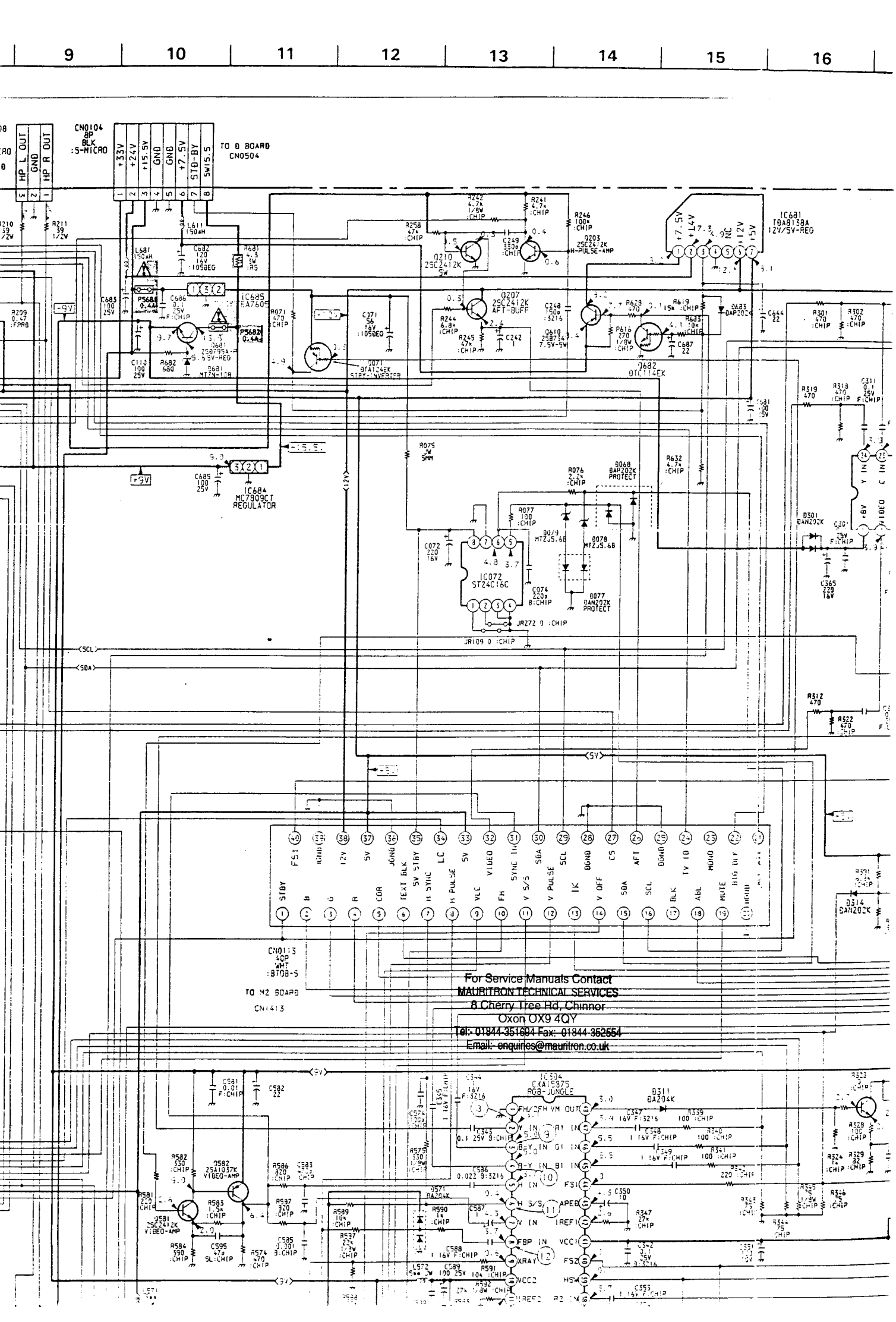
9
10
11
12
13
14
15
16
CN0104
8P
BLK
:S-MICRO
TO B BOARD
CN0504
IC681
TDA8138A
12V/5V-REG
IC685
EA7605
IC684
MC7909CT
REGULATOR
IC072
ST24C16C
IC504
CXA1397S
RGB-JUNGLE
CN0113
40P
WHT
:BTOB-S
TO M2 BOARD
CN1413
For Service Manuals Contact
MAURITRON TECHNICAL SERVICES
8 Cherry Tree Rd, Chinnor
Oxon OX9 4QY
Tel:- 01844-351694 Fax:- 01844-352554
Email:- enquiries@maurITRON.co.uk

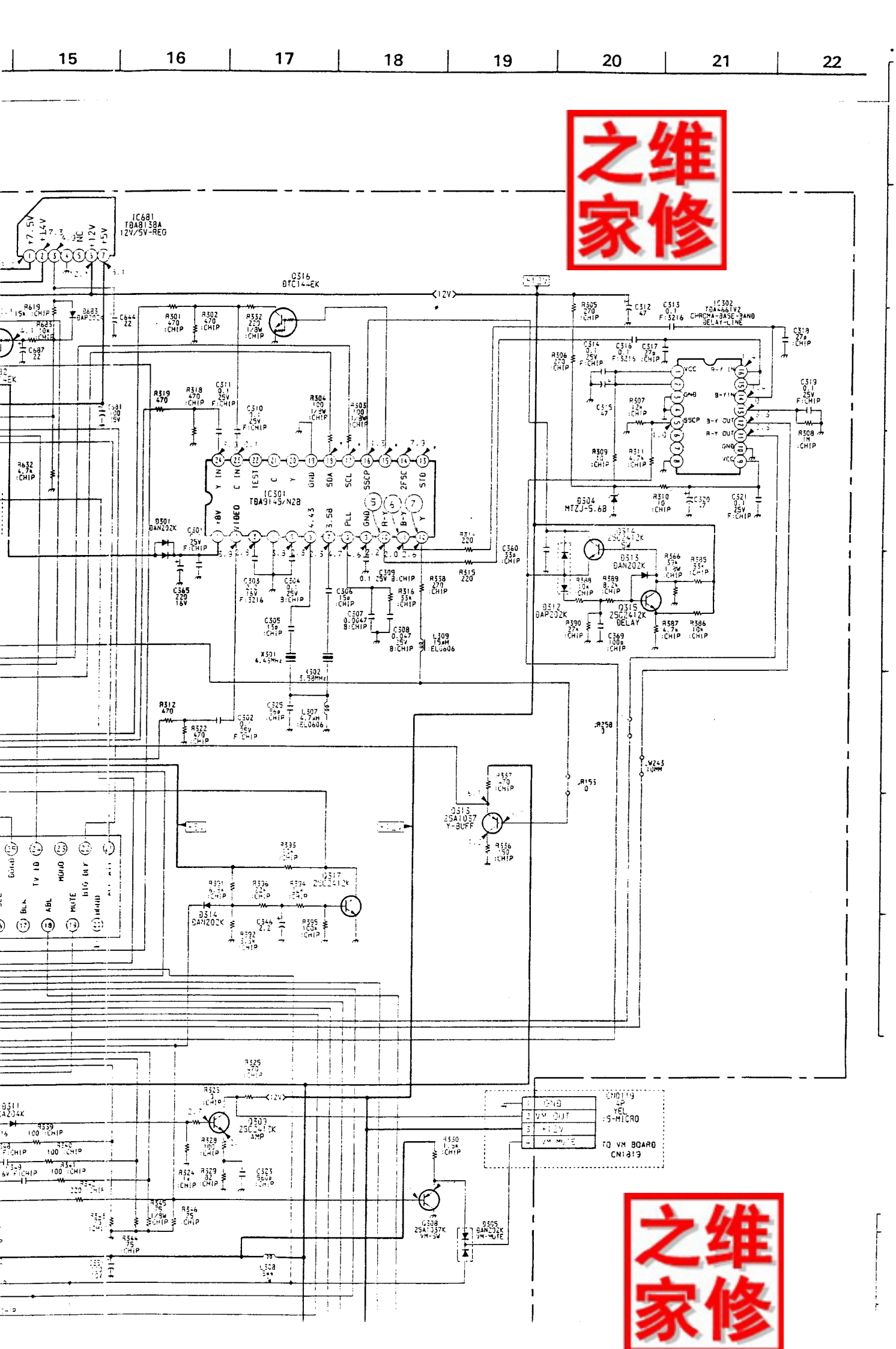
15
16
17
18
19
20
21
22
IC681
TDA8138A
12V/5V-REG
Q316
DTC144EK
12V
IC301
TDA9145/N28
IC302
TDA4661V2
CHROMA-BASE-BAND
DELAY-LINE
Q304
MTZJ-5.6B
Q313
DAN202K
Q315
2SC2412K
DELAY
Q312
DAP202K
Q314
DAN202K
Q513
2SA1037
Y-BUFF
Q317
2SC2412K
Q503
2SC2412K
AMP
Q508
2SA1037K
VM-SW
Q505
DAN202K
VM-MUTE
CN1019
4P
YEL
S-MICRO
GND
VM OUT
+12V
VM MUTE
TO VM BOARD
CN1819
Y IN
C IN
TEST
C
Y
GND
SDA
SCL
SSCP
2FSC
STD
+8V
VIDEO
4.43
3.58
PLL
GND
R-Y
B-Y
Y
R-Y IN
B-Y IN
B-Y OUT
R-Y OUT
VCC
GND
SSCP
Tv 10
MONO
BLK
ABL
MUTE
BIG BUY
X301
4.43MHz
X302
3.58MHz
L309
15μH
EL0606
L307
4.7μH
EL0606
L308
5μH
L243
10MH
维修之家
维修之家

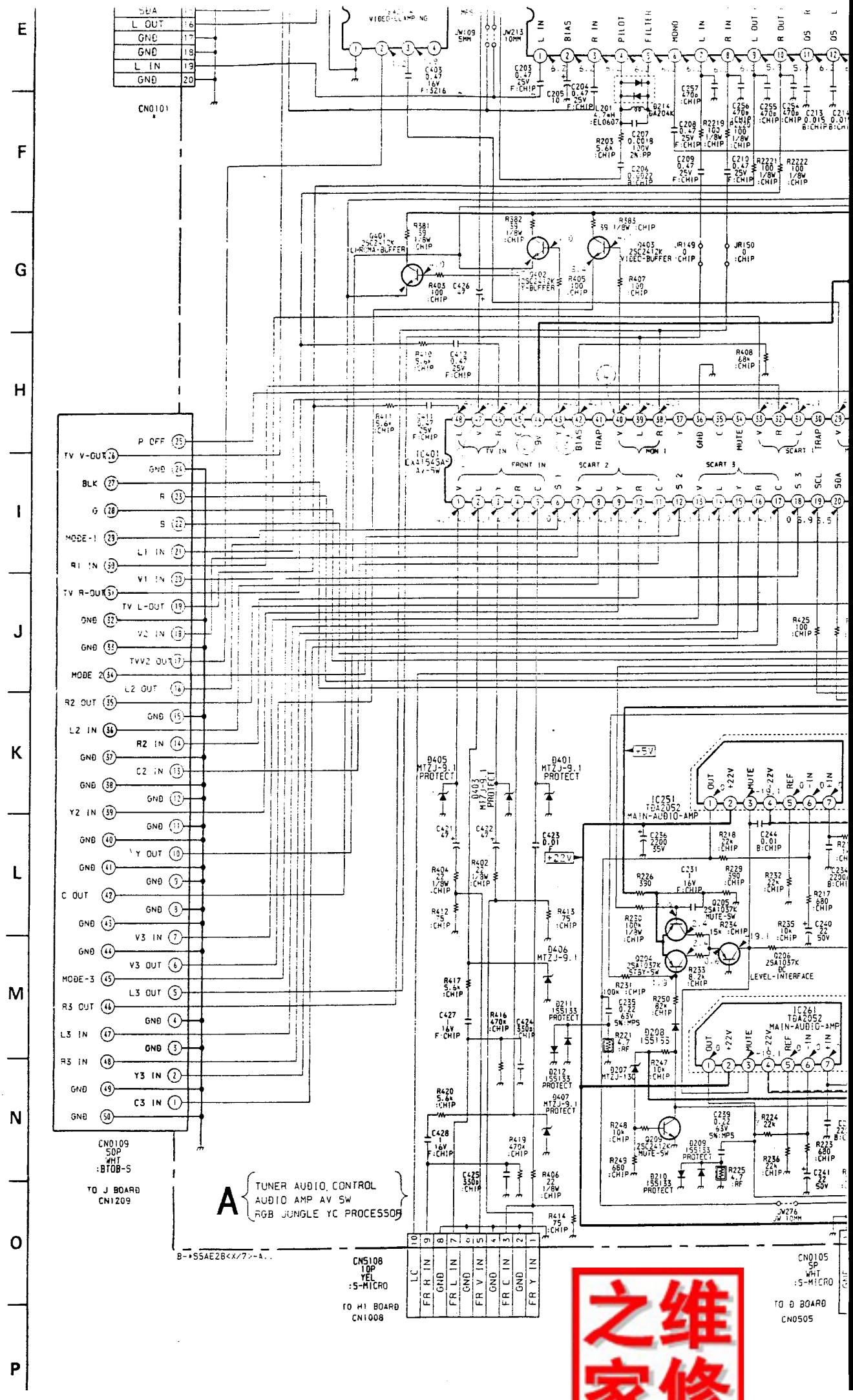
CN0101
CN0109
50P
WHT
:BTOB-S
TO J BOARD
CN1209
CN5108
10P
YEL
:S-MICRO
TO H1 BOARD
CN1008
CN0105
5P
WHT
:S-MICRO
TO B BOARD
CN0505
IC401
IC251
TBA2052
MAIN-AUDIO-AMP
IC261
TBA2052
MAIN-AUDIO-AMP
A
TUNER AUDIO CONTROL
AUDIO AMP AV SW
RGB JUNGLE YC PROCESSOR

维修之家

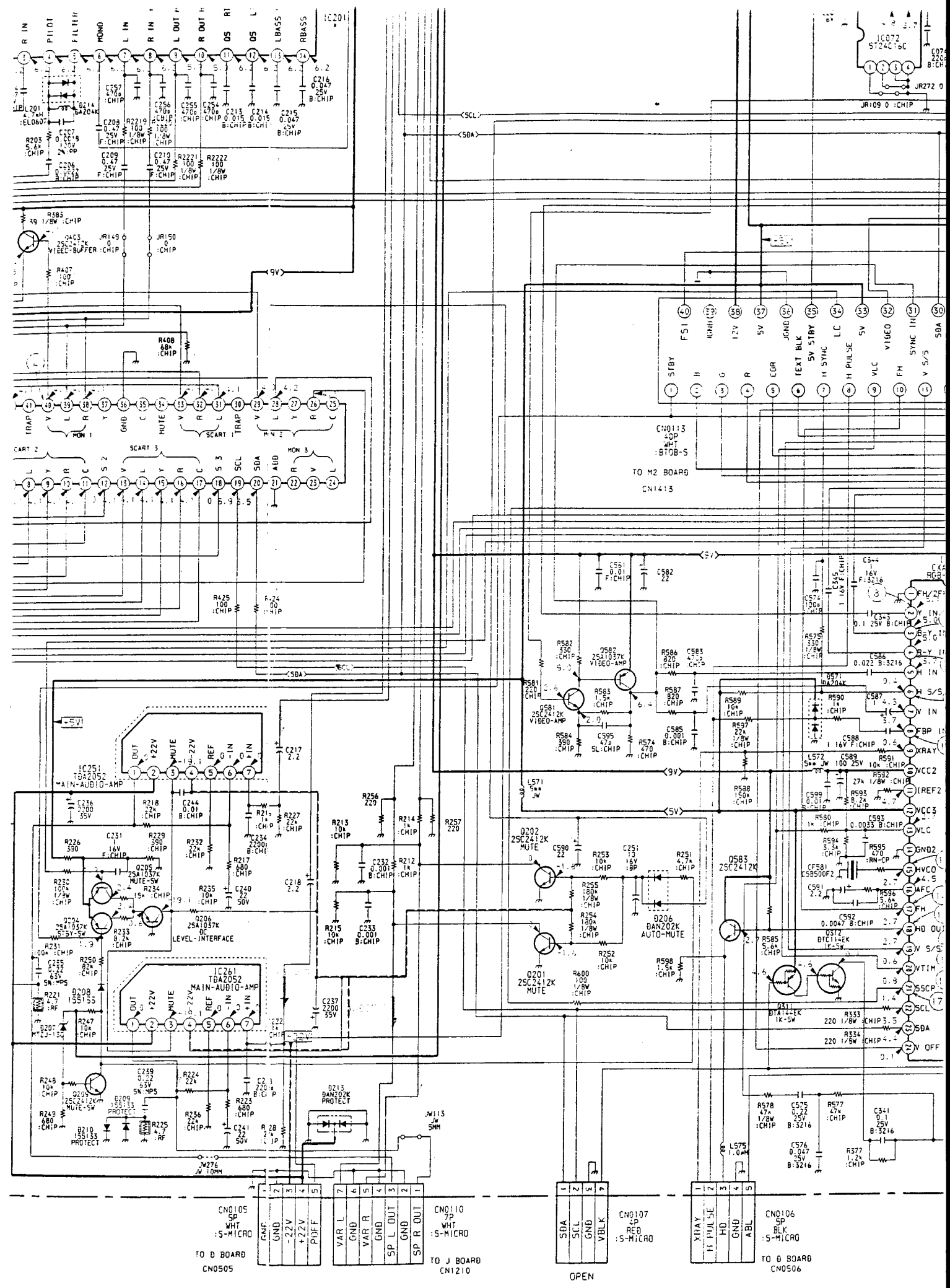
IC201
R IN
PILOT
FILTER
MONO
L IN
R IN
L OUT
R OUT
DS
DS
LBASS
RBASS
IC072
ST24C16C
JR272 0
JR109 0 :CHIP
SCL
SDA
Q403
2SC2412K
VIDEO-BUFFER
JR149 0 :CHIP
JR150 0 :CHIP
9V
R408 68k :CHIP
TRAP
MON 1
GND
MUTE
SCART 1
MON 2
SCART 2
SCART 3
MON 3
SCL
SDA
AUD
FS1
12V
5V
GND
TEXT BLK
5V STBY
H SYNC
H PULSE
5V
VIDEO
SYNC IN
SDA
STBY
B
G
R
CGR
VLC
FH
V S/S
CN0113
40P
WHT
:BTOB-S
TO M2 BOARD
CN1413
R425 100 :CHIP
R424 100 :CHIP
Q582
2SA1037K
VIDEO-AMP
Q581
2SC2412K
VIDEO-AMP
R582 330 :CHIP
R581 220 :CHIP
R583 1.5k :CHIP
R584 390 :CHIP
C595 47p SL:CHIP
R574 470 :CHIP
R586 820 :CHIP
C583 4.7k :CHIP
R587 820 :CHIP
C585 0.001 B:CHIP
R589 10k :CHIP
R597 22k 1/8W :CHIP
R588 150k :CHIP
C551 0.01 F:CHIP
C582 22
C365 1 16V F:CHIP
C586 0.022 B:3216
C587 1
C588 1 16V F:CHIP
C589 100 25V
R590 1k :CHIP
R591 10k :CHIP
R592 27k 1/8W :CHIP
R593 8.2k :CHIP
R594 3.3k :CHIP
R595 470 :CHIP
R596 5.6k :CHIP
C592 0.0047 B:CHIP
Q312
DTC114EK
1K-SW
R333 220 1/8W :CHIP
R334 220 1/8W :CHIP
FH/2F
Y IN
B-Y
R-Y
H IN
H S/S
V IN
FBP
XRAY
VCC2
IREF2
VCC3
VLC
GND2
RN-CP
HVCO
AFC
FH
HO OUT
V S/S
VTIM
SSCP
SCL
SDA
V OFF
IC251
TDA2052
MAIN-AUDIO-AMP
OUT
+22V
MUTE
-22V
REF
-IN
+IN
C236 2200 35V
R218 22k :CHIP
C244 0.01 B:CHIP
C217 2.2
R227 22k :CHIP
R229 390 :CHIP
C231 16V F:CHIP
R226 390
R232 22k :CHIP
R217 680 :CHIP
C234 2200 B:CHIP
Q205
2SA1037K
MUTE-SW
R234 15k :CHIP
R235 10k :CHIP
C240 22 50V
C218 2.2
Q206
2SA1037K
DC
LEVEL-INTERFACE
Q204
2SA1037K
STBY-SW
R233 8.2k :CHIP
R230 100k 1/8W :CHIP
R231 100k :CHIP
R250 82k :CHIP
C255 0.22 63V SK:MPS
R221 4.7 :RF
D208 1SS133
D207 MTZJ-15V
R247 10k :CHIP
IC261
TDA2052
MAIN-AUDIO-AMP
C237 2200 35V
R256 220
R213 10k :CHIP
R214 1k :CHIP
R257 220
C232 0.001 B:CHIP
R212 1k :CHIP
R215 10k :CHIP
C233 0.001 B:CHIP
Q202
2SC2412K
MUTE
C590 22
R253 10k :CHIP
C251 13 16V :BP
R251 4.7k :CHIP
R255 180k 1/8W :CHIP
R254 180k 1/8W :CHIP
R252 10k :CHIP
Q201
2SC2412K
MUTE
R600 100 1/8W :CHIP
D206
DAN202K
AUTO-MUTE
Q583
2SC2412K
R585 5.6k :CHIP
R598 1.5k :CHIP
Q311
DTA144EK
1K-SW
R248 10k :CHIP
Q209
2SC2412K
MUTE-SW
R249 680 :CHIP
D210 1SS133 PROTECT
D209 1SS133 PROTECT
R225 4.7 :RF
C239 0.22 63V SK:MPS
R224 22k
R236 22k :CHIP
C241 22 50V
R223 680 :CHIP
D213
DAN202K
PROTECT
JW113 JW 5MM
JW274 JW 10MM
R578 47k 1/8W :CHIP
C575 0.22 25V B:3216
R577 47k :CHIP
C341 0.1 25V B:3216
C576 0.047 25V B:3216
L575 1.0uH
R377 1.2k :CHIP
CN0105
5P
WHT
:S-MICRO
GND
GND
-22V
+22V
PDFF
TO B BOARD
CN0505
CN0110
7P
WHT
:S-MICRO
VAR L
GND
VAR R
GND
SP L OUT
GND
SP R OUT
TO J BOARD
CN1210
CN0107
4P
RED
:S-MICRO
SDA
SCL
GND
VBLK
OPEN
CN0106
5P
BLK
:S-MICRO
XRAY
H PULSE
HO
GND
ABL
TO B BOARD
CN0506

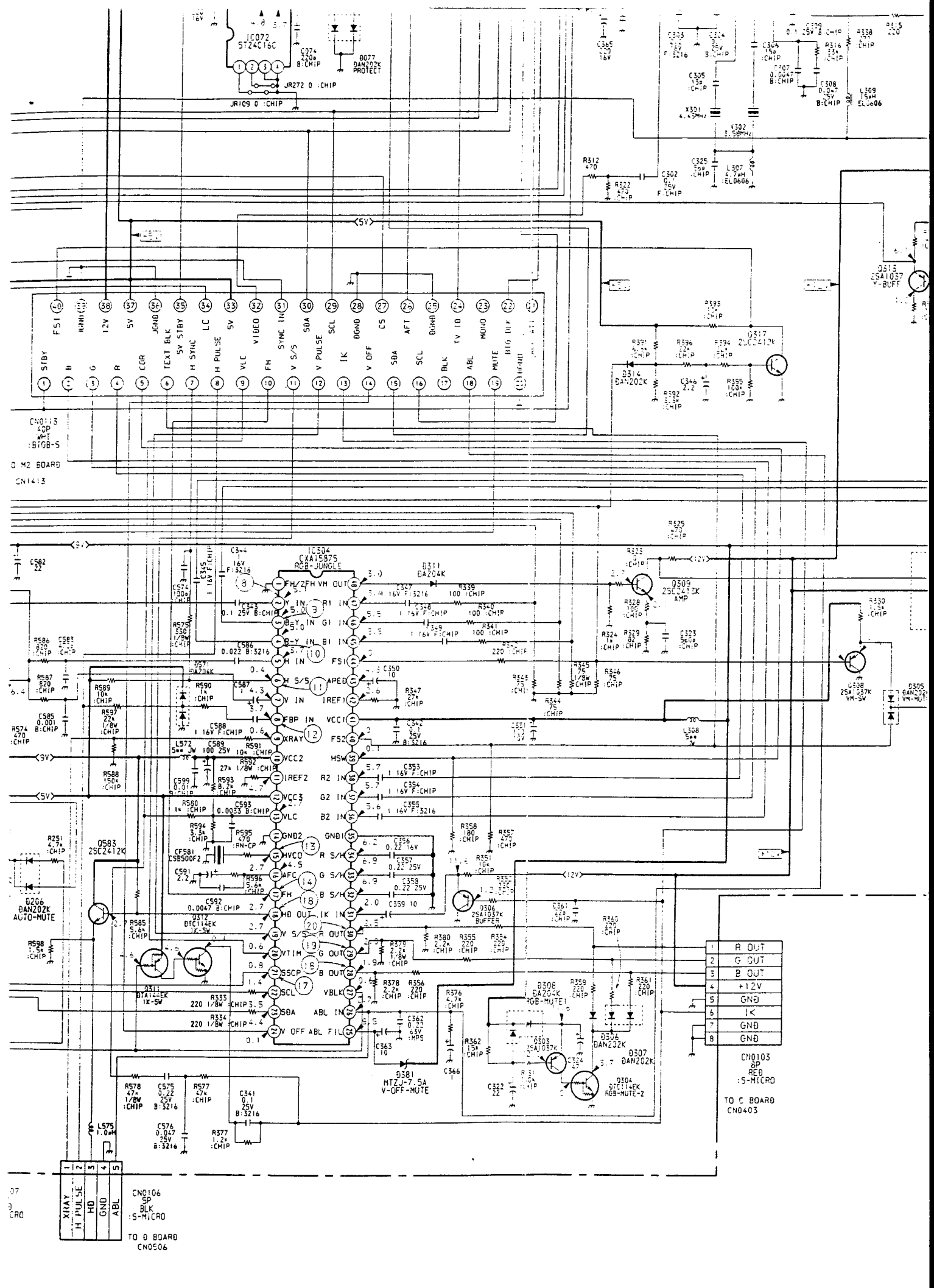
IC072
ST24C16C
D077
DAN202K
PROTECT
JR272 0 :CHIP
JR109 0 :CHIP
X301
4.43MHz
X302
3.58MHz
L307
4.7uH
EL0606
L309
15uH
EL0606
D313
2SA1037
V-BUFF
D317
2SC2412K
D314
DAN202K
CN0113
40P
WHT
:B70B-S
TO M2 BOARD
CN1413
IC504
CXA1537S
RGB-JUNGLE
D311
DA204K
D309
2SC2412K
AMP
D308
DA204K
RGB-MUTE1
D303
2SA1037K
D304
DTC114EK
RGB-MUTE-2
D306
DAN202K
D307
DAN202K
D308
2SA1037K
VM-SW
D305
DAN202K
VM-MUT
D583
2SC2412K
D206
DAN202K
AUTO-MUTE
D312
DTC114EK
1K-SW
D311
DTA114EK
1K-SW
D506
2SA1037K
BUFFER
D381
MTZJ-7.5A
V-OFF-MUTE
CN0103
8P
RED
:S-MICRO
TO C BOARD
CN0403
R OUT
G OUT
B OUT
+12V
GND
1K
GND
GND
CN0106
5P
BLK
:S-MICRO
TO D BOARD
CN0506
XRAY
H PULSE
HD
GND
ABL

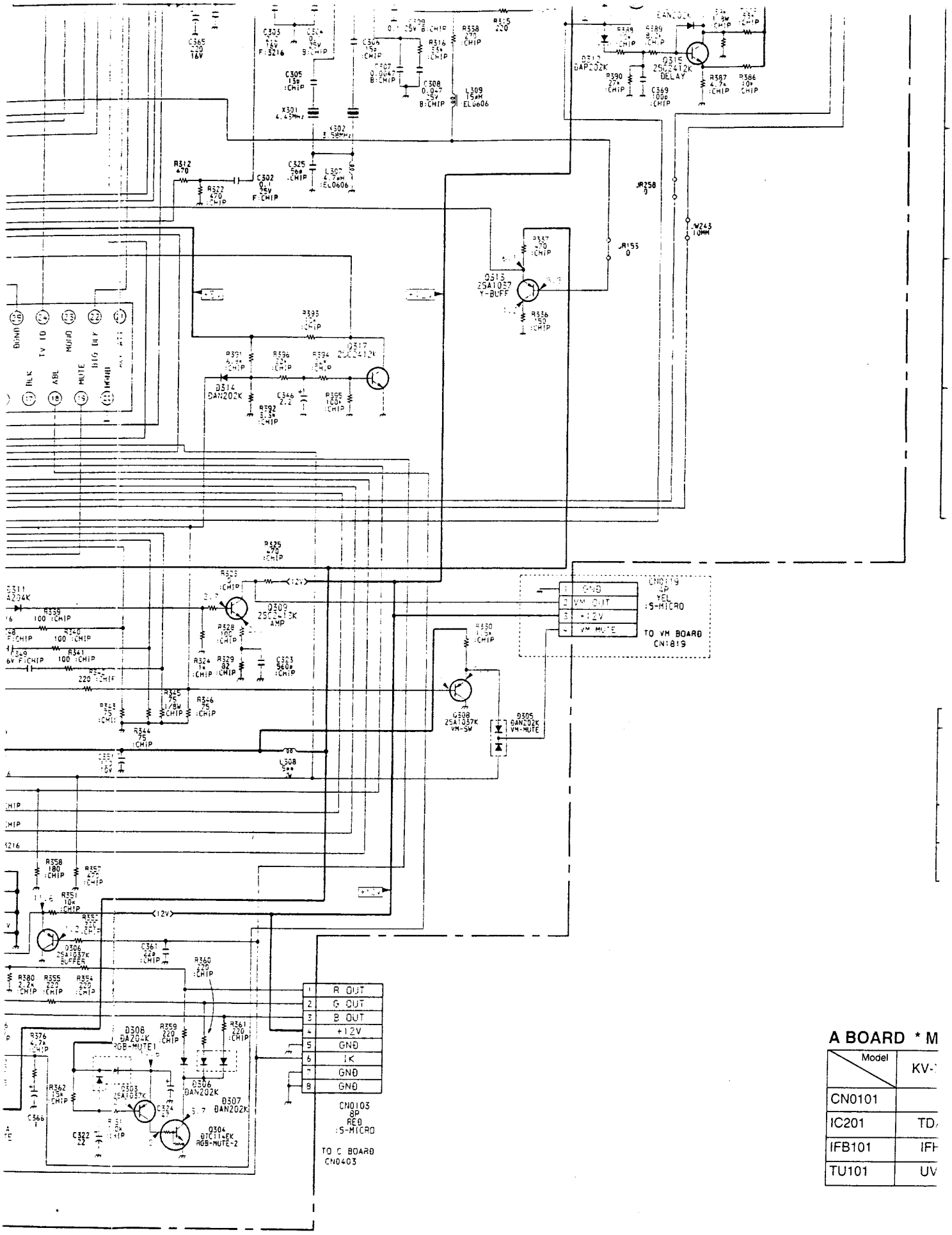

A BOARD * M

Model	KV-1
CN0101	
IC201	TD/
IFB101	IFH
TU101	UV

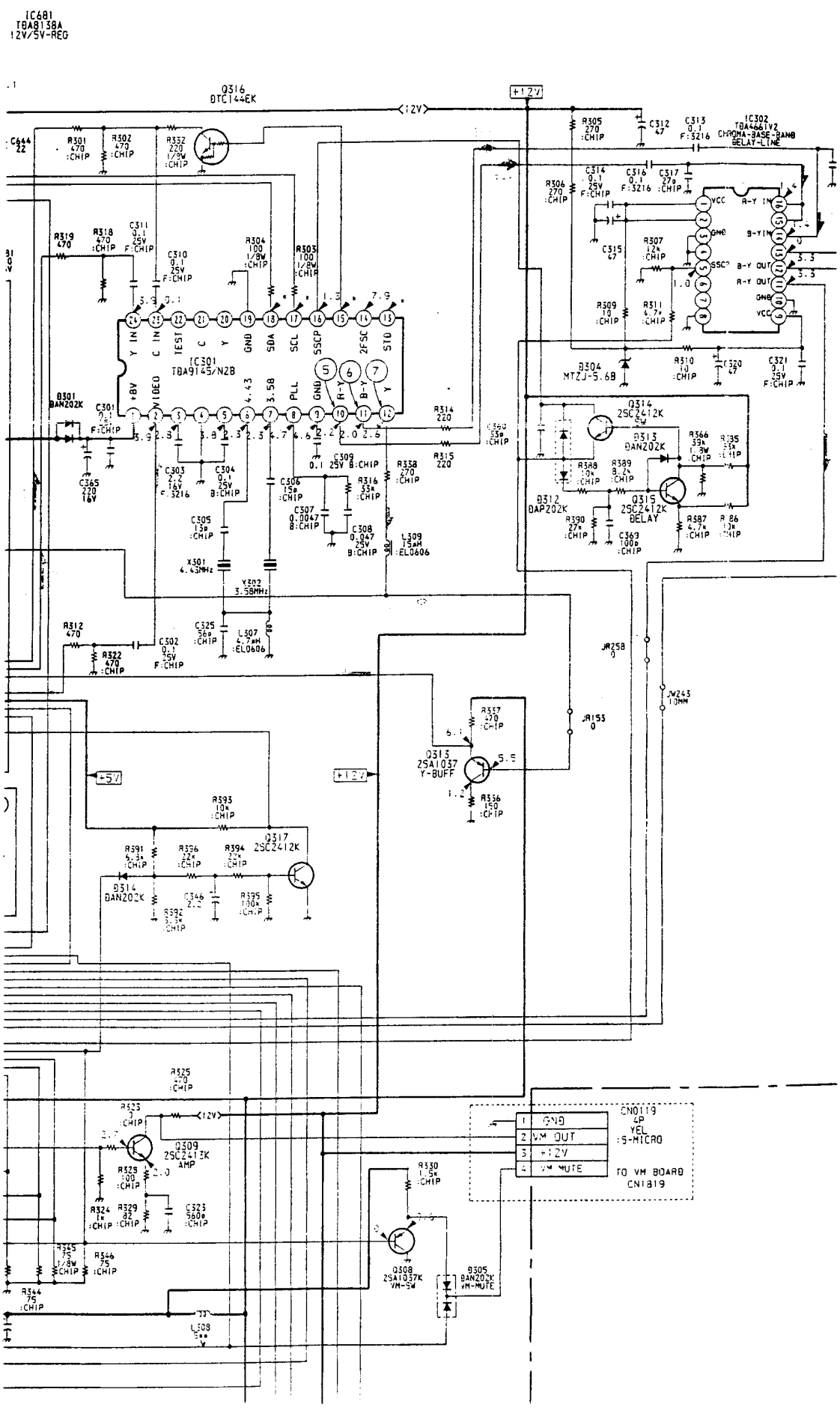
IC681
TBA8138A
12V/5V-REG
Q316
DTC144EK
+12V
IC301
TBA9145/N2B
IC302
TBA4661V2
CHROMA-BASE-BAND
DELAY-LINE
Q314
2SC2412K
Q313
DAN202K
Q312
DAP202K
Q315
2SC2412K
DELAY
Q313
2SA1037
Y-BUFF
+5V
Q317
2SC2412K
Q309
2SC2412K
AMP
Q308
2SA1037K
VM-SW
Q305
DAN202K
VM-MUTE
CN0119
4P
YEL
S-MICRO
1 GND
2 VM OUT
3 +12V
4 VM MUTE
TO VM BOARD
CN1819

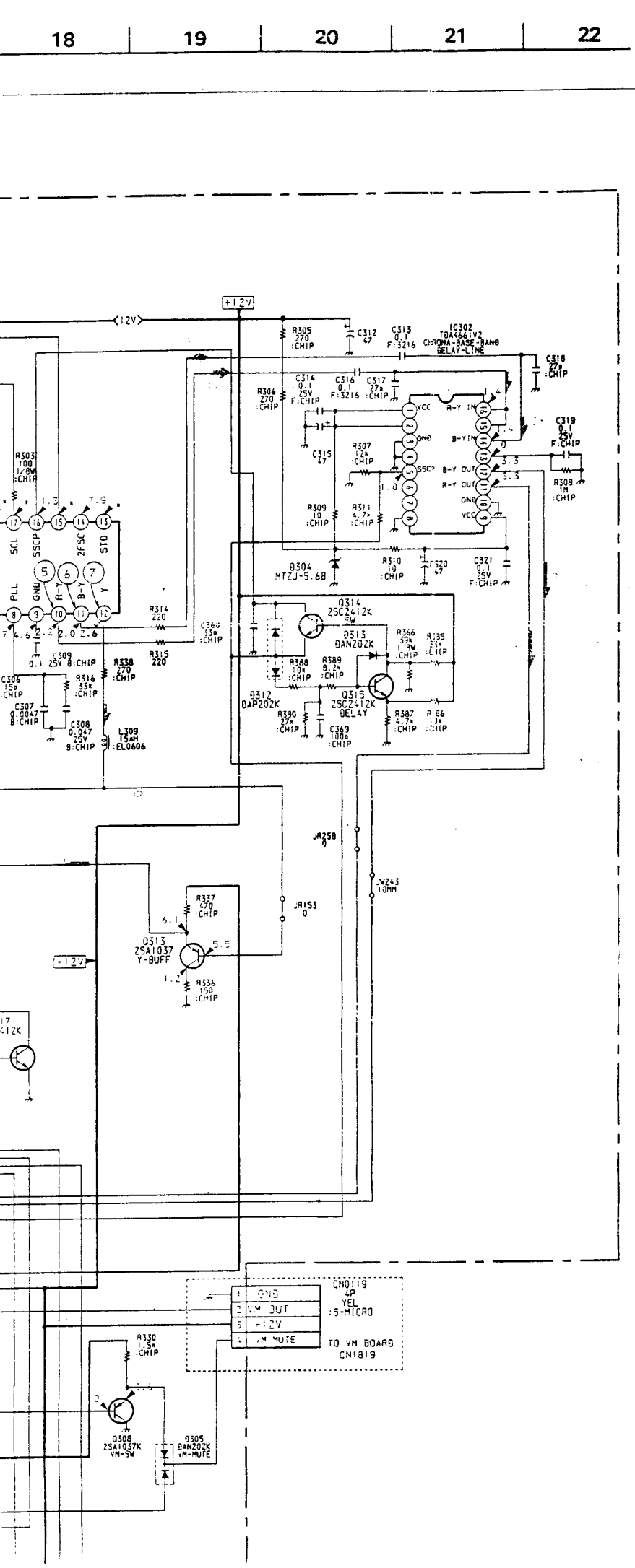

• WAVEFORMS A BOARD

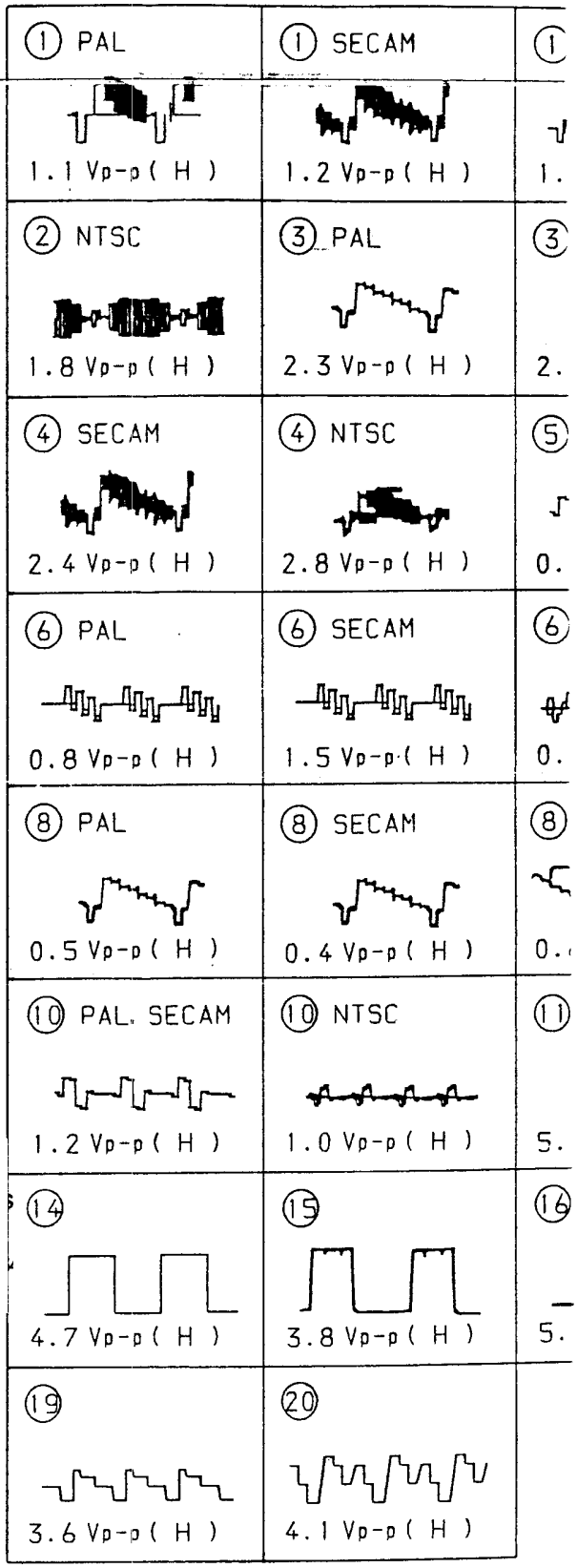

As to the voltage volue shown by the mark ※ on the Schematic Diagram, see the another list.

A BOARD

	PAL	SECAM	NTSC3.58	NTSC4.43
IC301 ⑬	0.0	0.0	4.8	4.9
⑮	0.0	5.0	5.0	0.0
⑰	4.7	4.2	3.6	4.1
⑲	4.8	4.4	4.6	4.8
Q301 (B)	0.0	0.0	0.0	1.6

A BOARD

	① SECAM	① NTSC	② PAL	② SECAM
	1.2 Vp-p (H)	1.4 Vp-p (H)	1.9 Vp-p (H)	1.3 Vp-p (H)
	③ PAL	③ SECAM	③ NTSC	④ PAL
	2.3 Vp-p (H)	2.2 Vp-p (H)	2.7 Vp-p (H)	2.3 Vp-p (H)
	④ NTSC	⑤ PAL	⑤ SECAM	⑤ NTSC
	2.8 Vp-p (H)	0.6 Vp-p (H)	1.2 Vp-p (H)	0.5 Vp-p (H)
	⑥ SECAM	⑥ NTSC	⑦ PAL, SECAM	⑦ NTSC
	1.5 Vp-p (H)	0.7 Vp-p (H)	0.5 Vp-p (H)	0.5 Vp-p (H)
	⑧ SECAM	⑧ NTSC	⑨ PAL, SECAM	⑨ NTSC
	0.4 Vp-p (H)	0.6 Vp-p (H)	1.5 Vp-p (H)	1.5 Vp-p (H)
	⑩ NTSC	⑪	⑫	⑬
	1.0 Vp-p (H)	5.2 Vp-p (H)	6.7 Vp-p (H)	0.12 Vp-p(540KHZ)
	⑮	⑯	⑰	⑱
	3.8 Vp-p (H)	5.0 Vp-p (H)	8.9 Vp-p (H)	3.3 Vp-p (H)
	⑳			
	4.1 Vp-p (H)			

ge volue shown by
the Schematic
e another list.

SECAM	NTSC3.58	NTSC4.43
0.0	4.8	4.9
5.0	5.0	0.0
4.2	3.6	4.1
4.4	4.6	4.8
0.0	0.0	1.6

• A BOARD IC201 TDA66

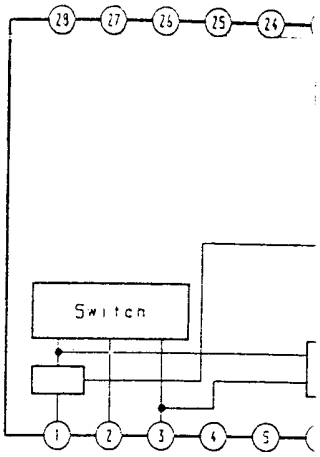

• A BOARD IC201 TDA66

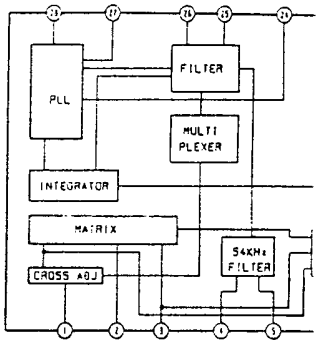

• A BOARD IC301 TDA91

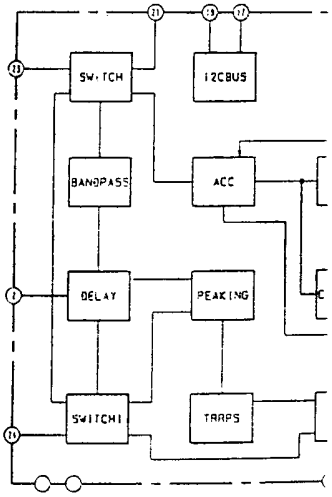

• A BOARD IC304 CXA1587S

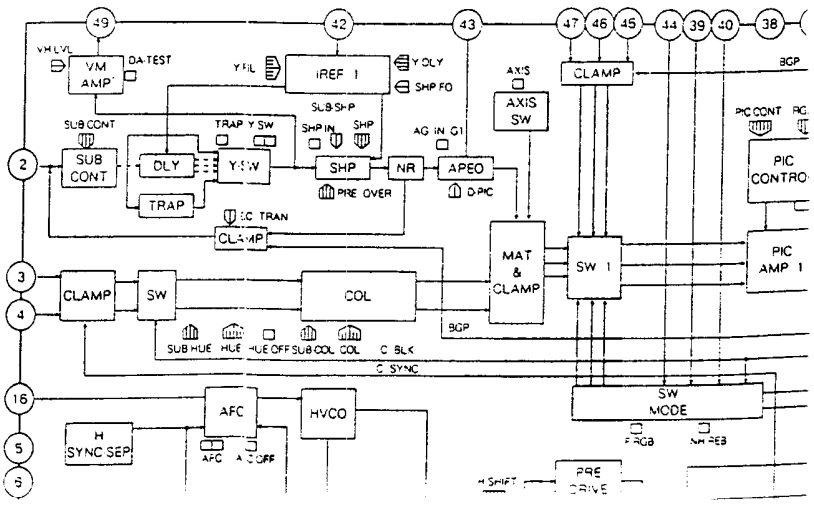

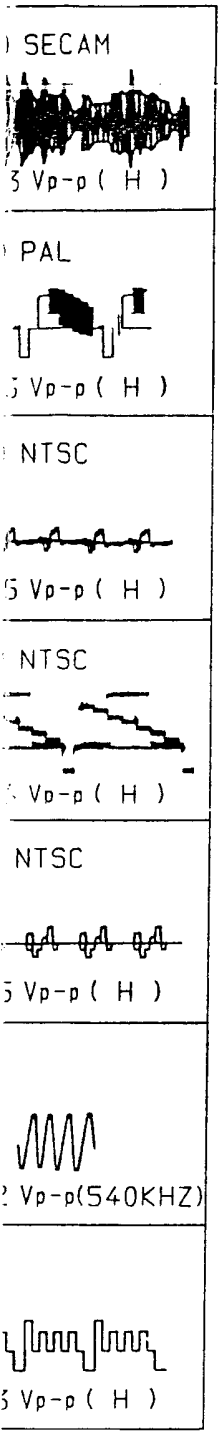

• A BOARD IC201 TDA6622 (UK Model only)

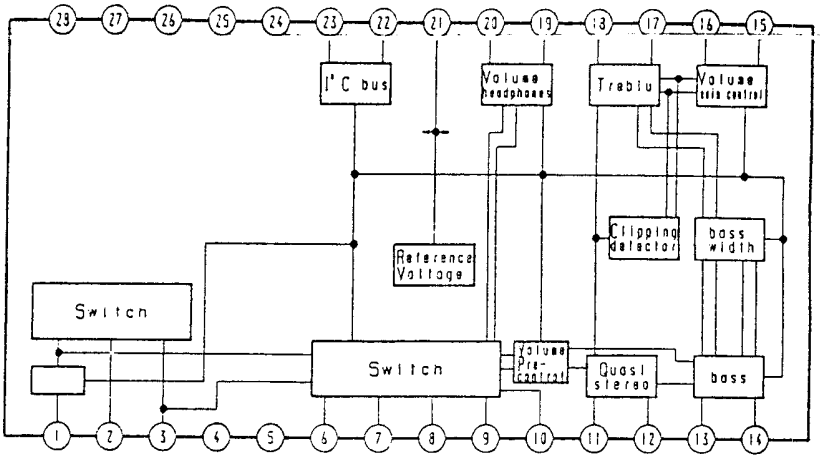

• A BOARD IC201 TDA6612

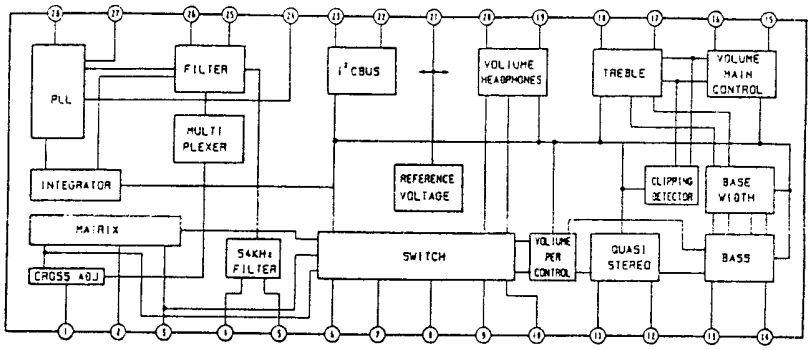

• A BOARD IC301 TDA9145

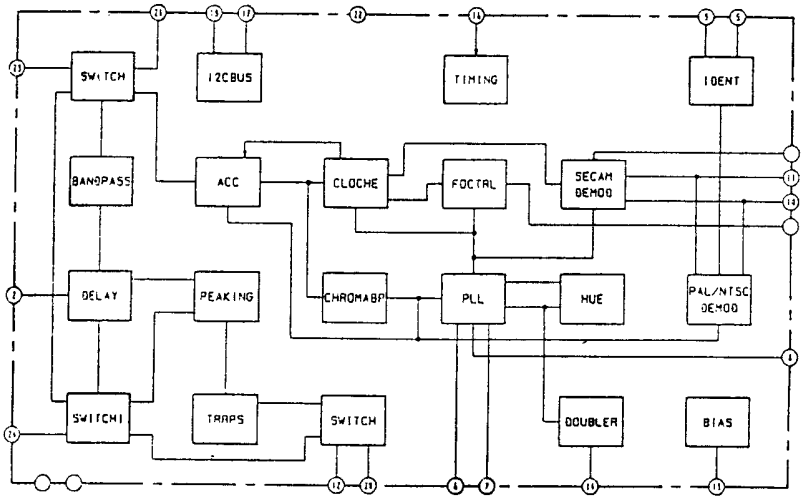

CXA1587S

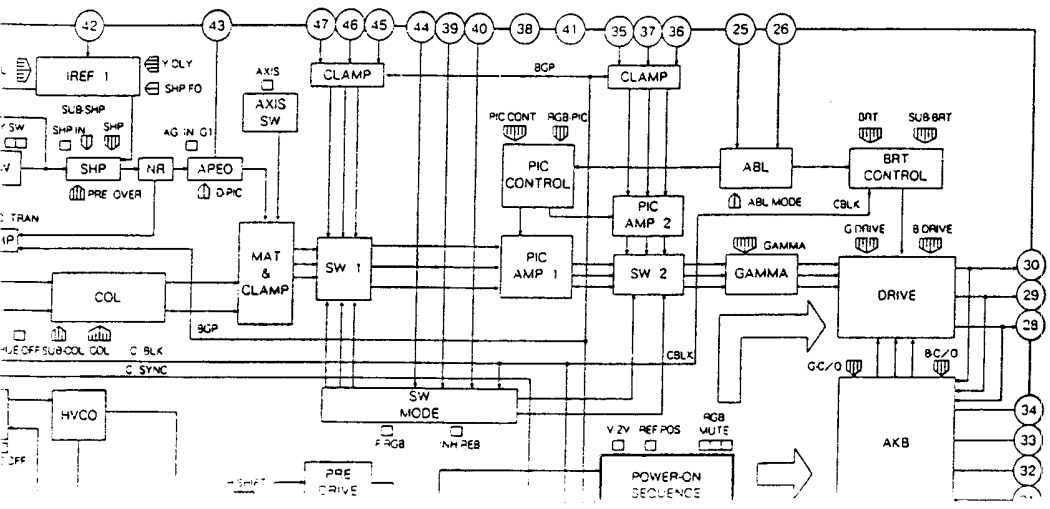

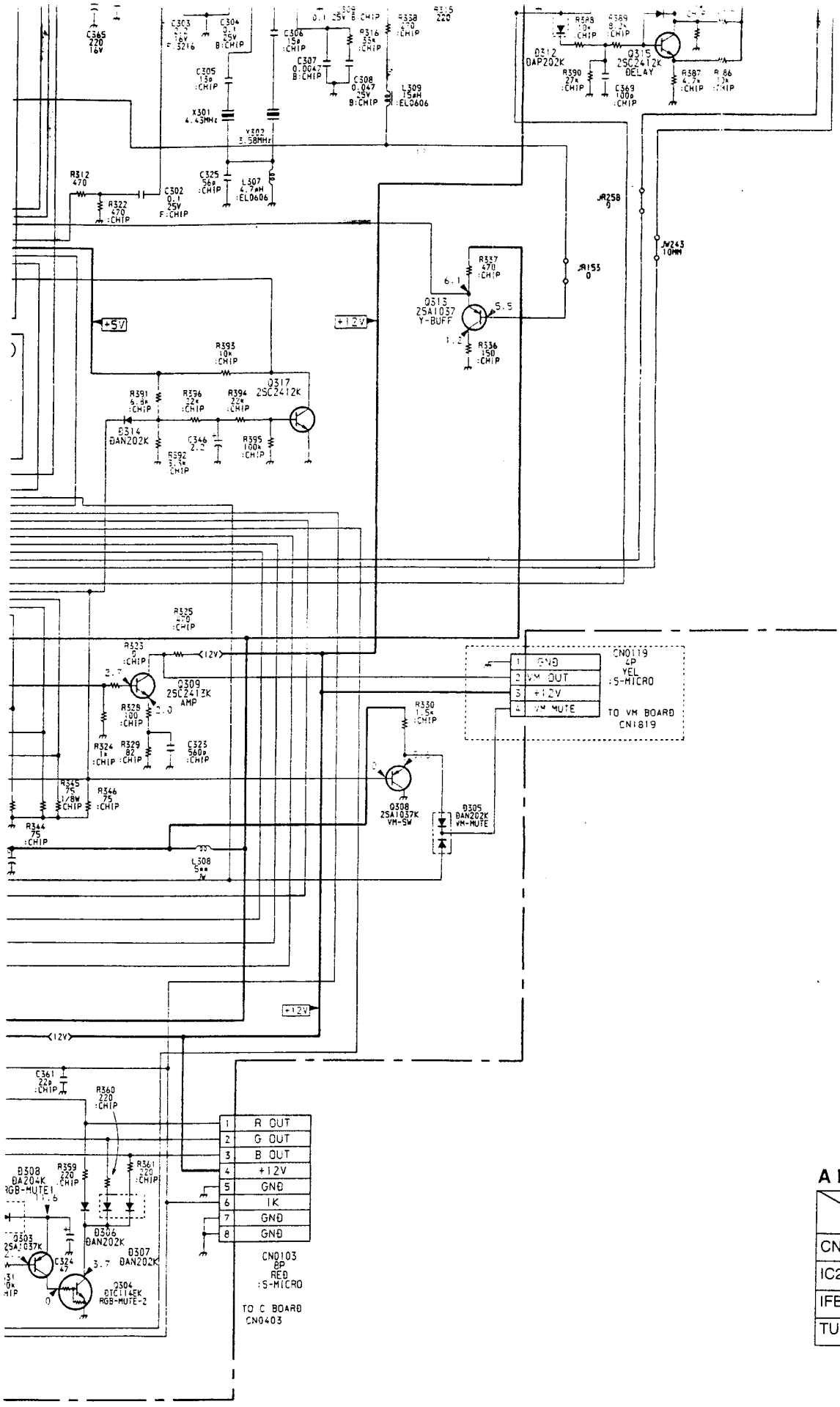
C365 220 16V
C303 2.2 16V F:5216
C304 0.1 25V B:CHIP
C305 15p :CHIP
X301 4.43MHz
X302 3.58MHz
C306 15p :CHIP
C307 0.0047 B:CHIP
R316 55k :CHIP
C308 0.047 25V B:CHIP
R338 470 :CHIP
L309 15μH :EL0606
R315 220
R388 10k :CHIP
R389 8.2k :CHIP
D312 DAP202K
Q315 2SC2412K DELAY
R390 27k :CHIP
C369 100p :CHIP
R387 4.7k :CHIP
R386 10k :CHIP
R312 470
R322 470 :CHIP
C302 0.1 25V F:CHIP
C325 56p :CHIP
L307 4.7μH :EL0606
JR258 0
JW243 10MM
JR153 0
R337 470 :CHIP
Q313 2SA1037 Y-BUFF
R336 150 :CHIP
+5V
+12V
R393 10k :CHIP
Q317 2SC2412K
R391 6.8k :CHIP
R396 22k :CHIP
R394 22k :CHIP
D314 DAN202K
C346 2.2
R395 100k :CHIP
R392 3.3k :CHIP
R325 470 :CHIP
R323 0 :CHIP
Q309 2SC2412K AMP
R328 100 :CHIP
R324 1k :CHIP
R329 82 :CHIP
C323 560p :CHIP
R345 75 1/8W :CHIP
R346 75 :CHIP
R364 75 :CHIP
L308 5μH
CN0119 4P YEL :S-MICRO
1 GND
2 VM OUT
3 +12V
4 VM MUTE
TO VM BOARD CN1819
R330 1.5k :CHIP
Q308 2SA1037K VM-SW
D305 DAN202K VM-MUTE
C361 22p :CHIP
R360 220 :CHIP
D308 DA204K RGB-MUTE1
R359 220 :CHIP
R361 220 :CHIP
D306 DAN202K
D307 DAN202K
Q303 2SA1037K
C324 47
Q304 DTC114EK RGB-MUTE-2
CN0103 8P RED :S-MICRO
1 R OUT
2 G OUT
3 B OUT
4 +12V
5 GND
6 IK
7 GND
8 GND
TO C BOARD CN0403

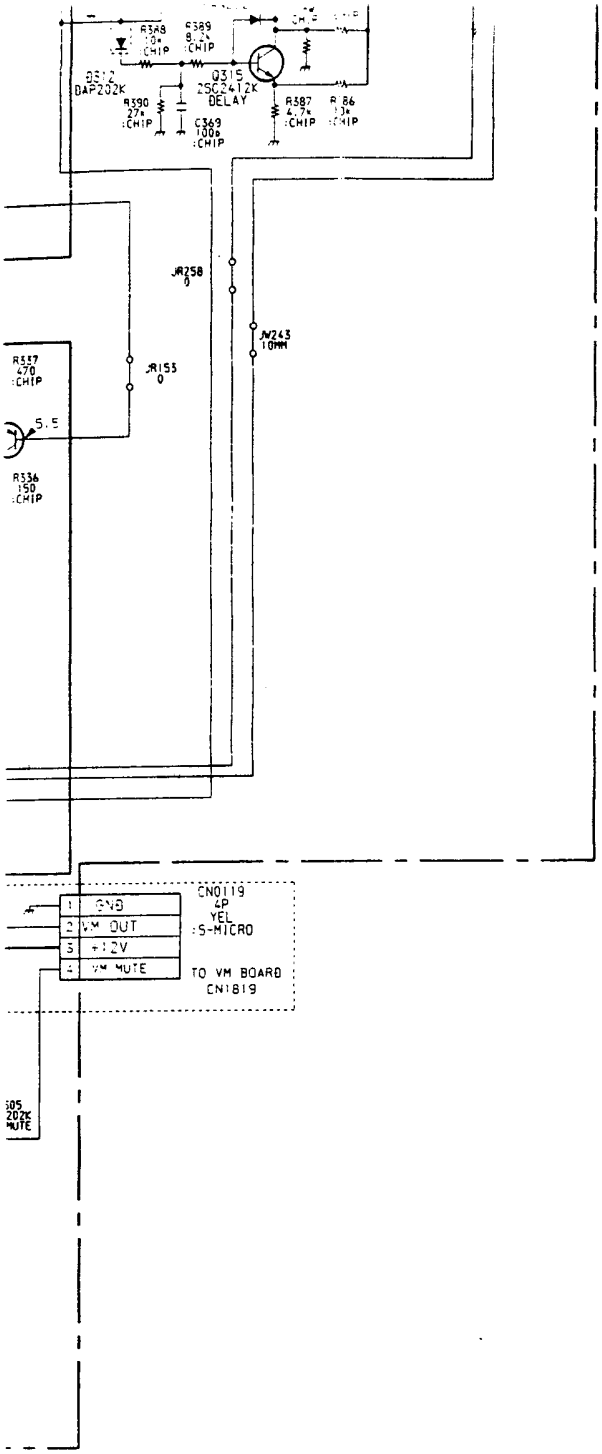

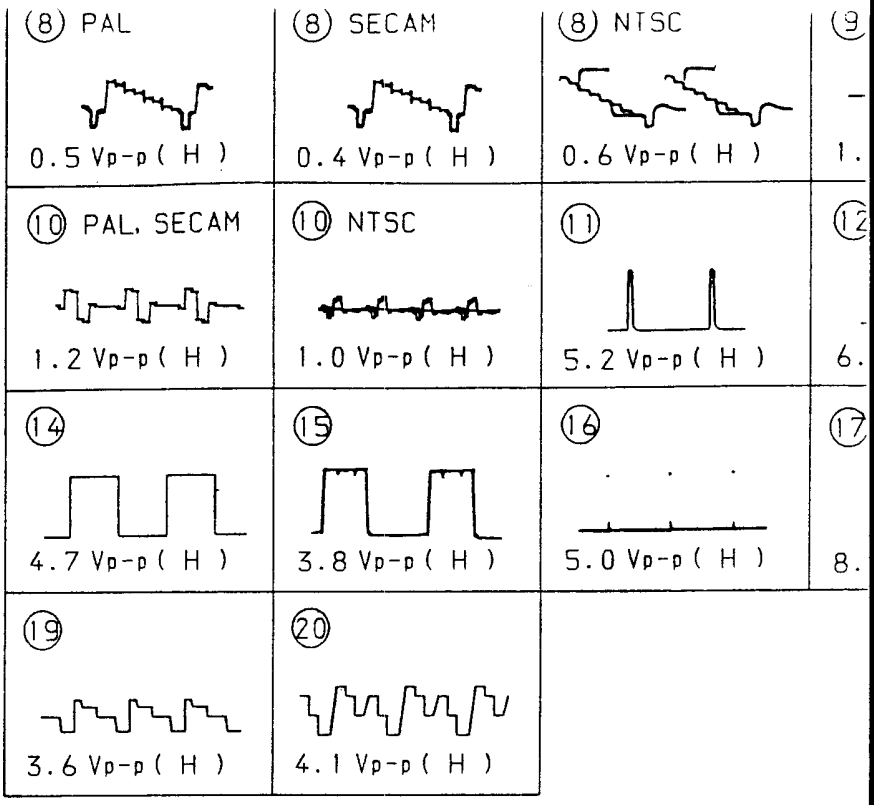

As to the voltage volue shown by the mark ※ on the Schematic Diagram, see the another list.

A BOARD

	PAL	SECAM	NTSC3.58	NTSC4.43
IC301 ⑬	0.0	0.0	4.8	4.9
⑮	0.0	5.0	5.0	0.0
⑰	4.7	4.2	3.6	4.1
⑱	4.8	4.4	4.6	4.8
Q301(B)	0.0	0.0	0.0	1.6
(C)	5.5	5.5	5.5	0.1
Q305(B)	0.0	5.5	5.5	0.0
(C)	0.0	0.0	0.0	1.6

A BOARD * MARK

Model	KV-X2971A	KV-X2971B	KV-X2971D	KV-X2971K	KV-X2973E	KV-X2972U
CN0101	-	-	-	-	20P	20P
IC201	TDA6612	TDA6612	TDA6612	TDA6612	TDA6612	TDA6622
IFB101	IFH-389	IFH-389F	IFH-389	IFH-389	IFH-389	IFH-395
TU101	UV916H	UV916H	UV916H	UV916H	UV916H	U944C

CAM	(8) NTSC	(9) PAL, SECAM	(9) NTSC
)-p (H)	0.6 Vp-p (H)	1.5 Vp-p (H)	1.5 Vp-p (H)
SC	(11)	(12)	(13)
-p (H)	5.2 Vp-p (H)	6.7 Vp-p (H)	0.12 Vp-p(540KHZ)
	(16)	(17)	(18)
)-p (H)	5.0 Vp-p (H)	8.9 Vp-p (H)	3.3 Vp-p (H)
-p (H)			

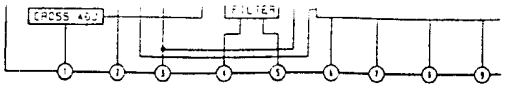

• A BOARD IC301 TDA9145

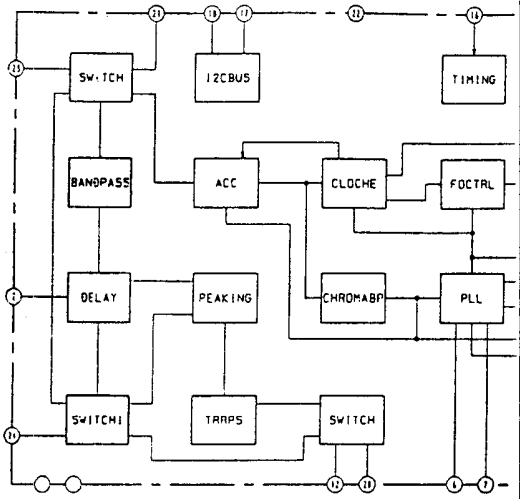

by

ITSC4.43
4.9
0.0
4.1
4.8
1.6
0.1
0.0
1.6

• A BOARD IC304 CXA1587S

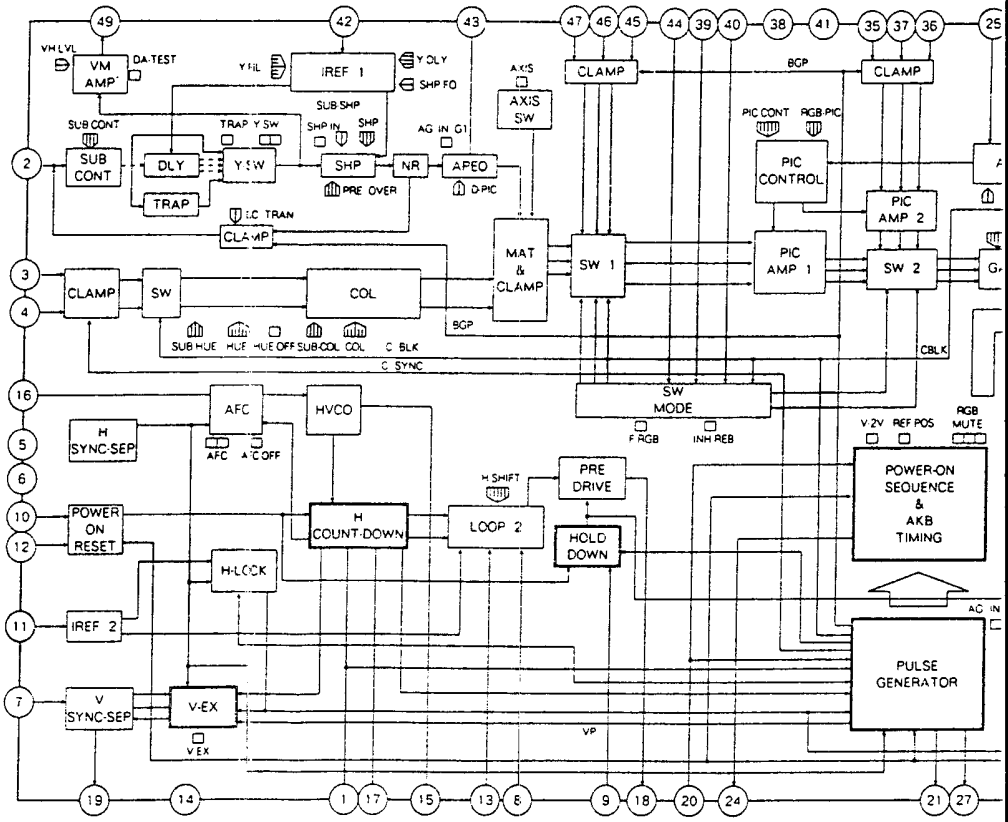

	KV-X2971K	KV-X2973E	KV-X2972U
	-	20P	20P
	TDA6612	TDA6612	TDA6622
	IFH-389	IFH-389	IFH-395
	UV916H	UV916H	U944C

• A BOARD IC251/261 TDA2052

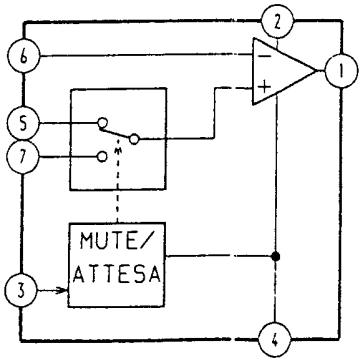

• A BOARD IC402 TEA2114

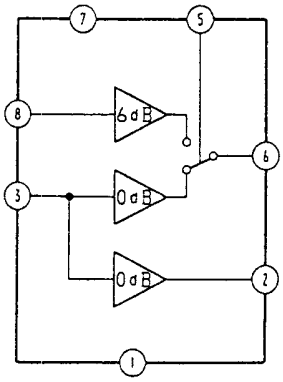

• A BOAR

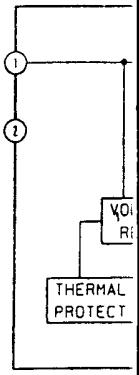

NTSC

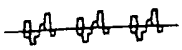

5 Vp-p (H)

2 Vp-p(540KHZ)

3 Vp-p (H)

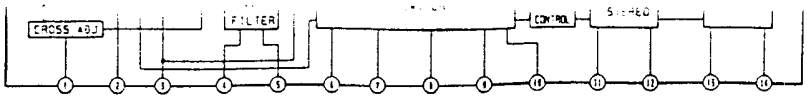

• A BOARD IC301 TDA9145

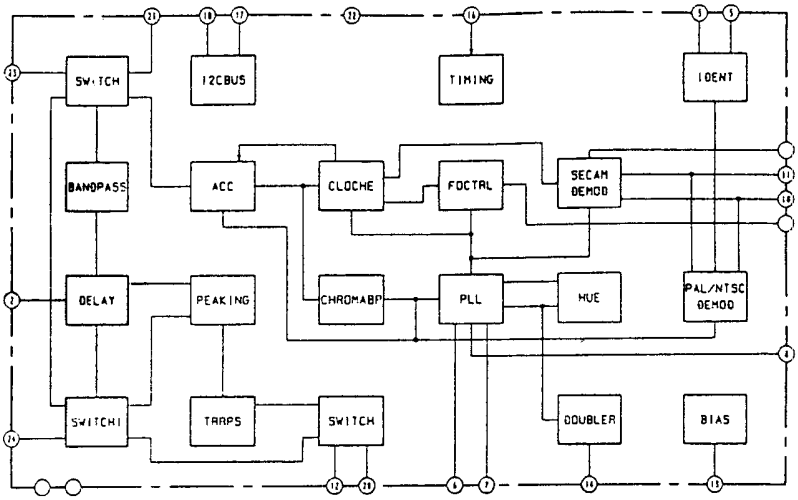

CXA1587S

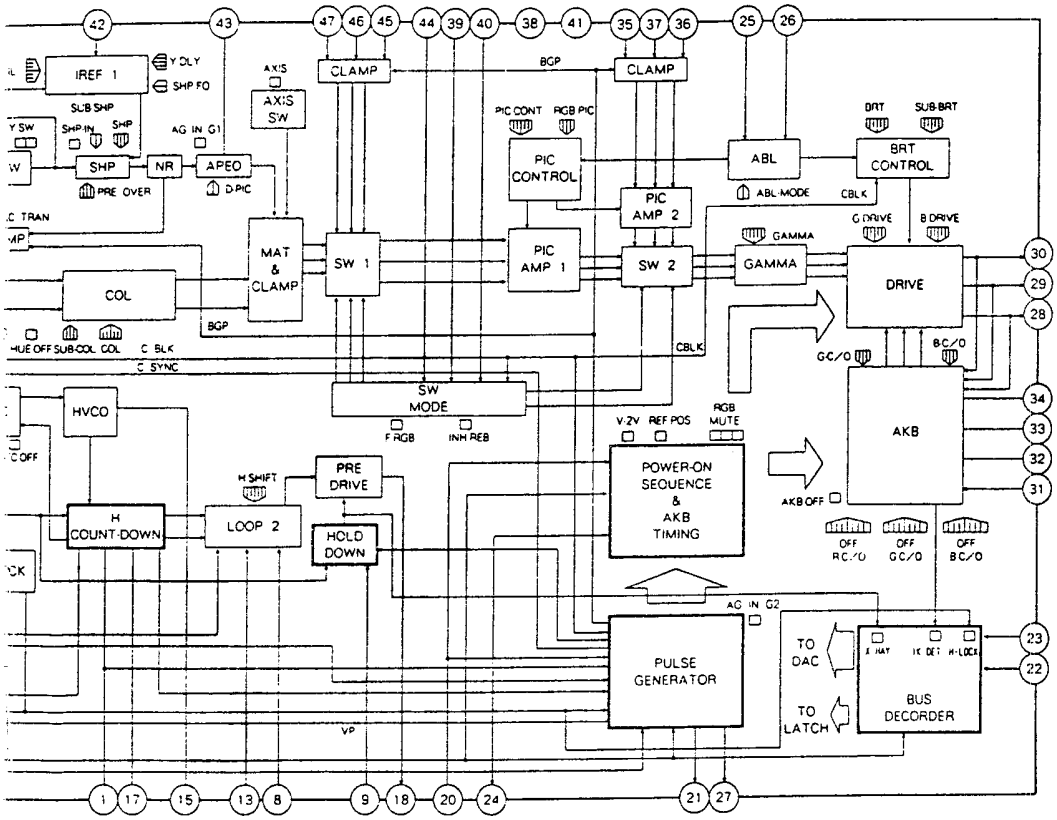

261 TDA2052

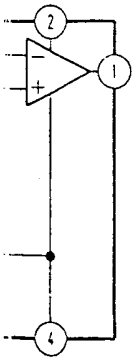

• A BOARD IC402 TEA2114

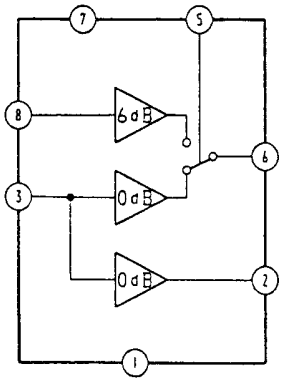

• A BOARD IC681 TDA8134A

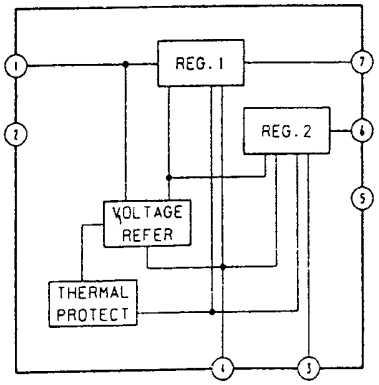

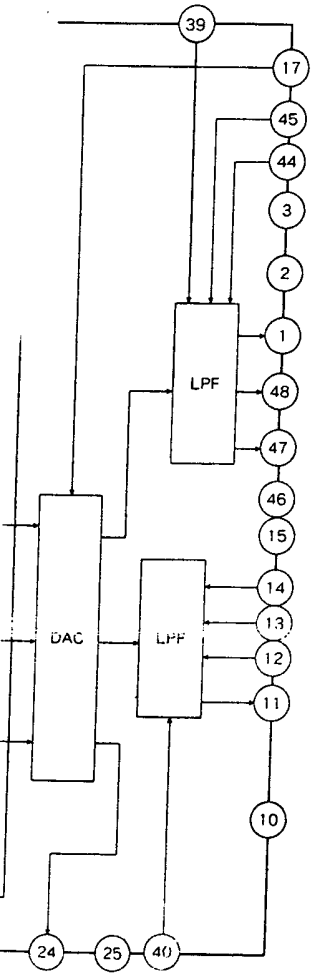
39
17
45
44
3
2
1
48
47
46
15
14
13
12
11
10
24
25
40
LPF
DAC
LPF

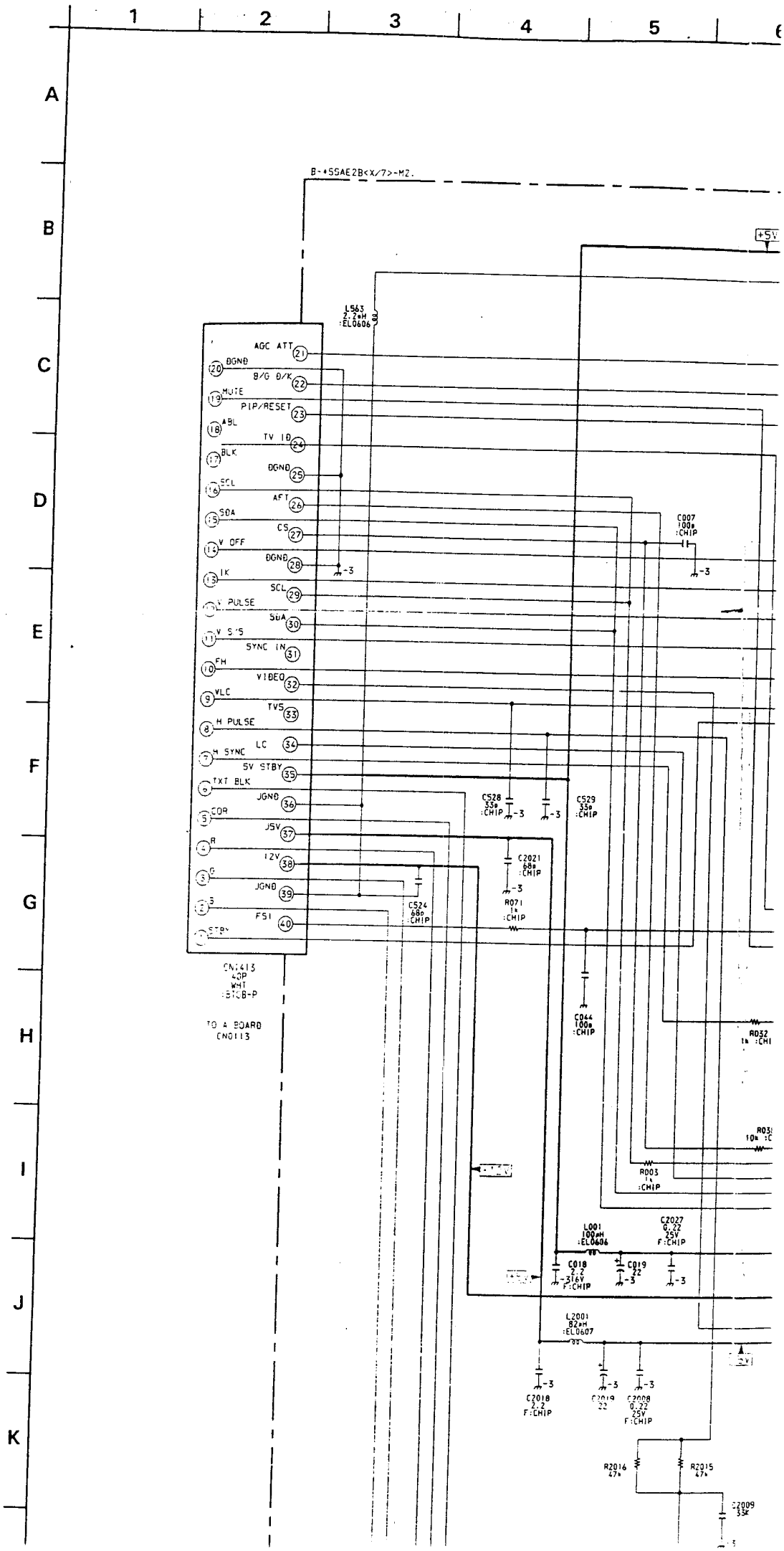
1
2
3
4
5
A
B
C
D
E
F
G
H
I
J
K
B-4SSAE2B<X/7>-M2.
+5V
L563
2.2uH
:EL0606
AGC ATT
DGND
B/G D/K
MUTE
PIP/RESET
ABL
TV ID
BLK
DGND
SCL
AFT
SDA
CS
V OFF
DGND
IK
SCL
V PULSE
SDA
V S'S
SYNC IN
FH
VIDEO
VLC
TVS
H PULSE
LC
H SYNC
5V STBY
TXT BLK
JGND
COR
J5V
R
12V
G
JGND
B
FSI
STBY
C007
100p
:CHIP
C528
33p
:CHIP
C529
33p
:CHIP
C2021
68p
:CHIP
R071
1k
:CHIP
C524
68p
:CHIP
CN1413
40P
WHT
:E12B-P
TO A BOARD
CN0113
C044
100p
:CHIP
R052
1k
:CHI
R003
1k
:CHIP
L001
100uH
:EL0606
C2027
0.22
25V
F:CHIP
C018
2.2
-316V
F:CHIP
C019
22
L2001
82uH
:EL0607
C2018
2.2
F:CHIP
C2019
22
C2008
0.22
25V
F:CHIP
R2016
47k
R2015
47k
C2009
33k

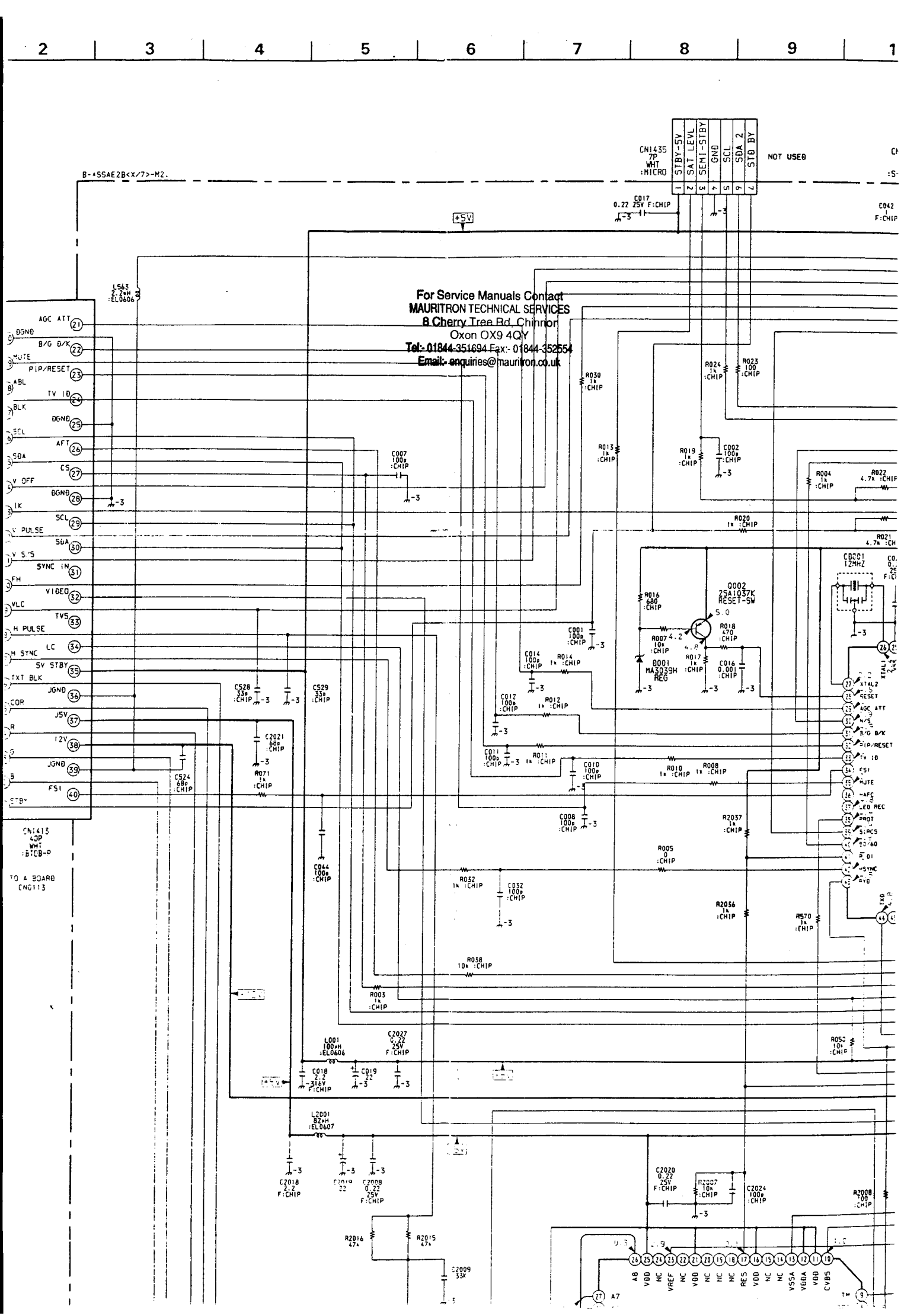
2
3
4
5
6
7
8
9
1
B-*SSAE2B<X/7>-M2.
CN1435
7P
WHT
:MICRO
STBY-5V
SAT LEVL
SEMI-STBY
GND
SCL
SDA 2
STB BY
NOT USED
C017
0.22 25V F:CHIP
+5V
L563
2.2uH
:EL0606
AGC ATT
DGND
B/G D/K
MUTE
PIP/RESET
TV IB
BLK
DGND
SCL
AFT
SDA
CS
V OFF
DGND
IK
SCL
V PULSE
SDA
V S'S
SYNC IN
FH
VIDEO
VLC
TVS
H PULSE
LC
H SYNC
SV STBY
TXT BLK
JGND
COR
J5V
I2V
JGND
FS1
CN1413
40P
WHT
:B-CB-P
TO A BOARD
CN0113
For Service Manuals Contact
MAURITRON TECHNICAL SERVICES
8 Cherry Tree Rd, Chinnor
Oxon OX9 4QY
Tel:- 01844-351694 Fax:- 01844-352554
Email:- enquiries@mauritron.co.uk
C007
100p
:CHIP
R030
1k
:CHIP
R024
1k
:CHIP
R023
100
:CHIP
R013
1k
:CHIP
R019
1k
:CHIP
C002
100p
:CHIP
R004
1k
:CHIP
R022
4.7k :CHIP
R020
1k :CHIP
R021
4.7k :CH
CDC01
12MHZ
Q002
2SA1037K
RESET-SW
R016
680
:CHIP
R018
470
:CHIP
R007
10k
:CHIP
D001
MA3039H
REG
R017
1k
:CHIP
C016
0.001
:CHIP
C001
100p
:CHIP
C014
100p
:CHIP
R014
1k :CHIP
C012
100p
:CHIP
R012
1k :CHIP
C011
100p
:CHIP
R011
1k :CHIP
C010
100p
:CHIP
R010
1k :CHIP
R008
1k :CHIP
C008
100p
:CHIP
R2037
1k
:CHIP
R005
0
:CHIP
C528
33p
:CHIP
C529
33p
:CHIP
C2021
68p
:CHIP
R071
1k
:CHIP
C524
68p
:CHIP
C044
100p
:CHIP
R032
1k :CHIP
C032
100p
:CHIP
R2036
1k
:CHIP
R570
1k
:CHIP
R038
10k :CHIP
R003
1k
:CHIP
R053
10k
:CHIP
L001
100uH
:EL0606
C2027
0.22
25V
F:CHIP
C018
2.2
:316V
F:CHIP
C019
22
L2001
82uH
:EL0607
C2018
2.2
F:CHIP
C2019
22
C2008
0.22
25V
F:CHIP
C2020
0.22
25V
F:CHIP
R2007
10k
:CHIP
C2024
100p
:CHIP
R2008
100
:CHIP
R2016
47k
R2015
47k
C2009
33K
XTAL2
RESET
AGC ATT
B/G D/K
PIP/RESET
TV IB
FSI
MUTE
AFC
LED REC
PROT
SIPCS
50/60
P_01
SYNC
RXD
TXD
A8
VDD
NC
VREF
NC
VDD
NC
NC
NC
RES
VDD
NC
NC
VSSA
VDDA
VDD
CVBS
A7
TM

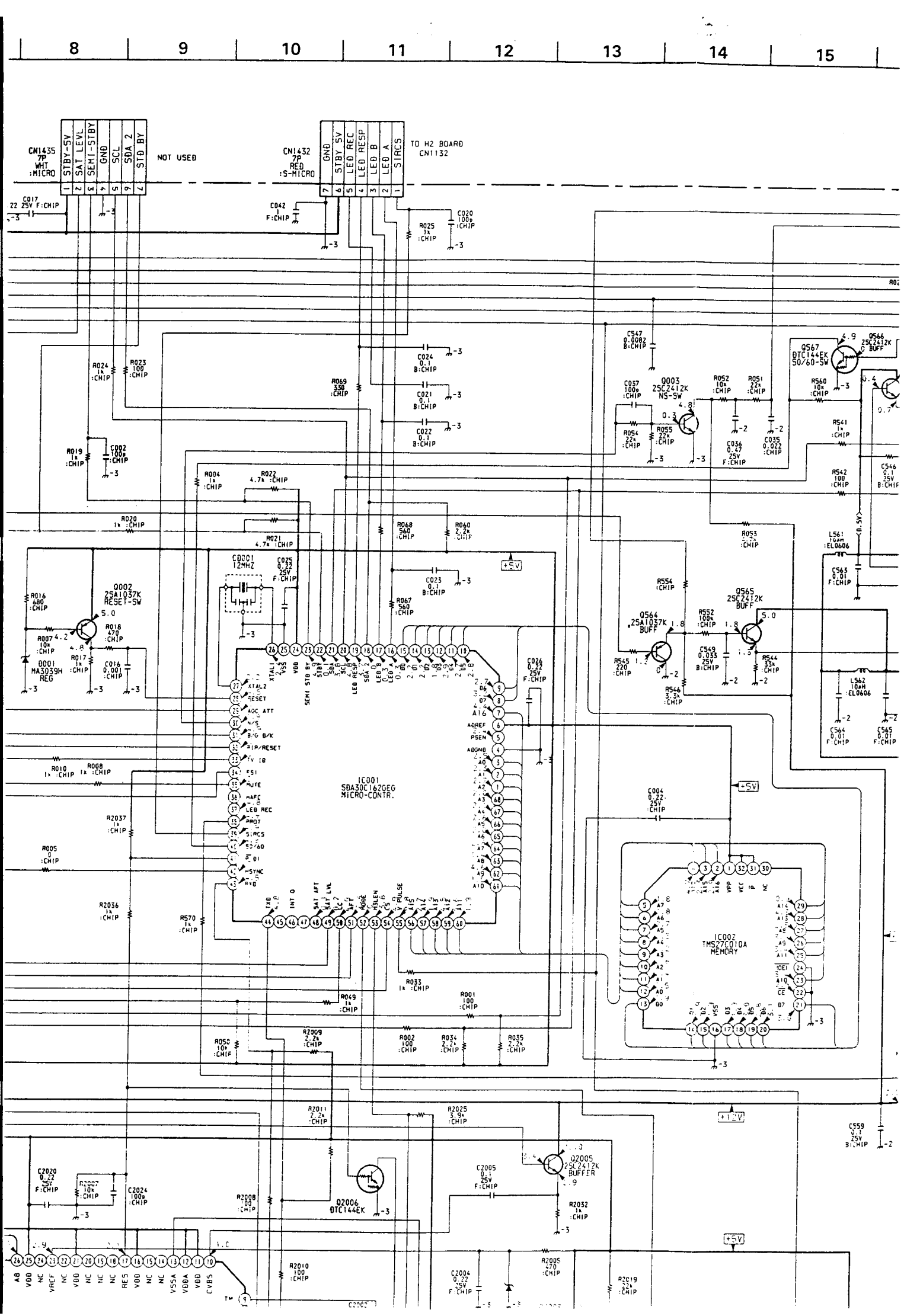
8
9
10
11
12
13
14
15
CN1435
7P
WHT
:MICRO
STBY-5V
SAT LEVL
SEMI-STBY
GND
SCL
SDA 2
STD BY
NOT USED
CN1432
7P
RED
:S-MICRO
GND
STBY 5V
LED REC
LED RESP
LED B
LED A
SIRCS
TO H2 BOARD
CN1132
IC001
SDA30C162GEG
MICRO-CONTR.
IC002
TMS27C010A
MEMORY
Q002
2SA1037K
RESET-SW
Q001
MA3039H
REG
Q003
2SC2412K
NS-SW
Q564
2SA1037K
BUFF
Q565
2SC2412K
BUFF
Q567
DTC144EK
50/60-SW
Q566
2SC2412K
G BUFF
Q2005
2SC2412K
BUFFER
Q2006
DTC144EK
CD001
12MHZ
+5V
+12V
0.5V

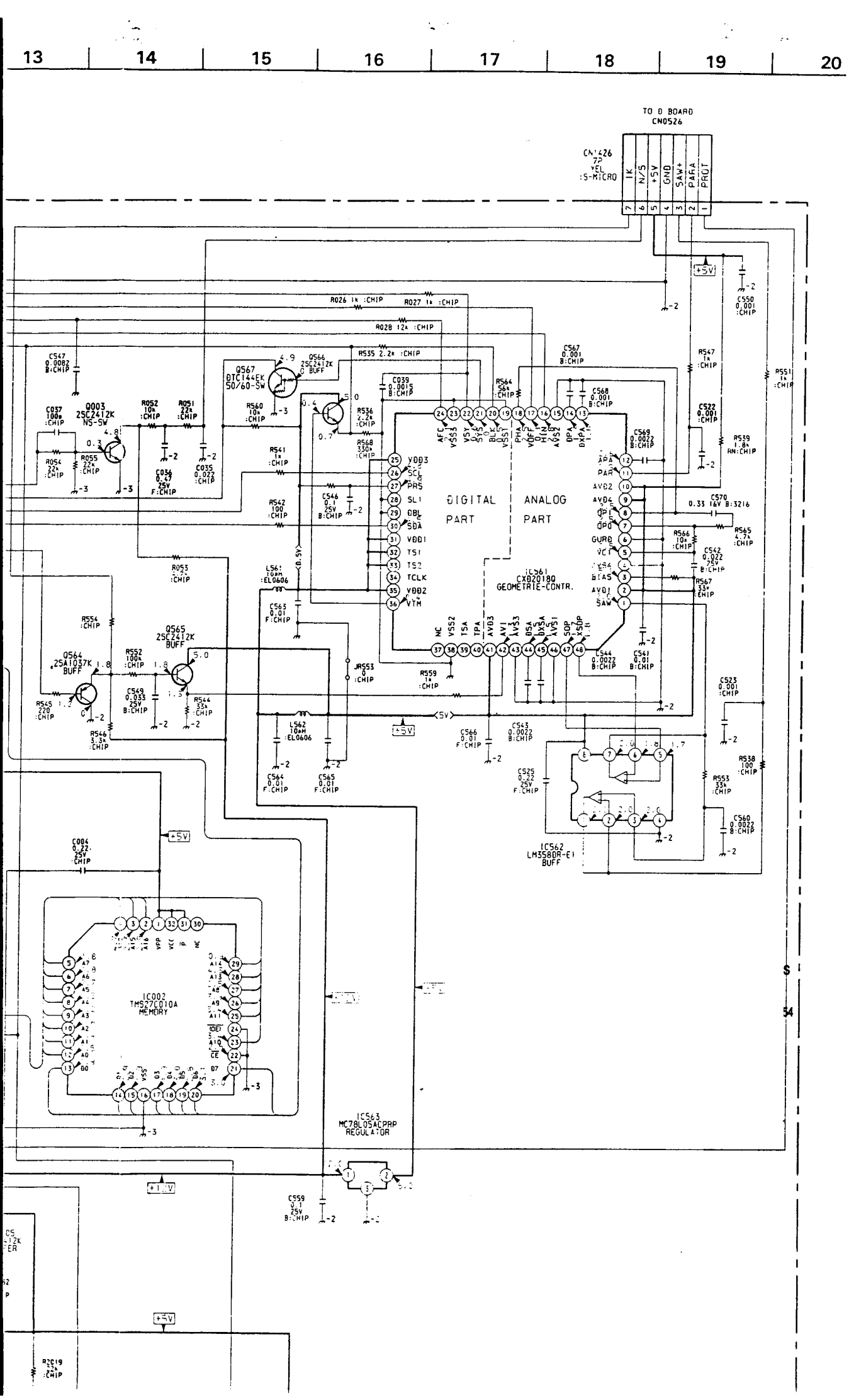
13
14
15
16
17
18
19
20
TO D BOARD
CN0526
CN1626
7P
YEL
:S-MICRO
IK
N/S
+5V
GND
SAW+
PARA
PROT
DIGITAL
PART
ANALOG
PART
IC561
CX020180
GEOMETRIE-CONTR.
IC002
TMS27C010A
MEMORY
IC563
MC78L05ACPRP
REGULATOR
IC562
LM358DR-E1
BUFF
Q003
2SC2412K
NS-SW
Q567
DTC144EK
50/60-SW
Q566
2SC2412K
BUFF
Q565
2SC2412K
BUFF
Q564
2SA1037K
BUFF
L561
EL0606
L562
EL0606
JR553
0
:CHIP
+5V
+12V

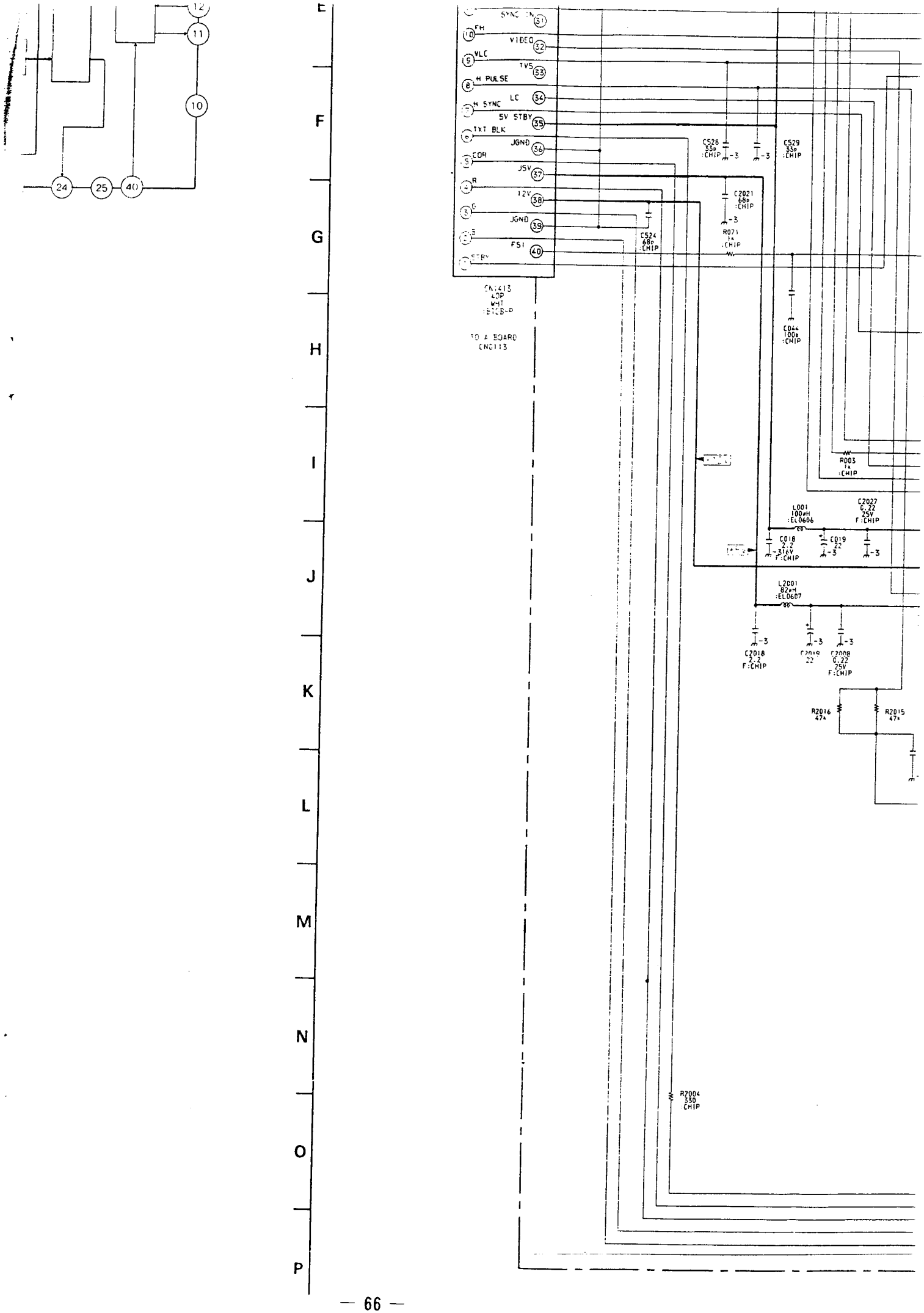
E
F
G
H
I
J
K
L
M
N
O
P
SYNC IN
FH
VIDEO
VLC
TVS
H PULSE
LC
H SYNC
5V STBY
TXT BLK
JGND
COR
JSV
R
12V
G
JGND
B
FSI
STBY
CN1413
40P
WHT
:FICB-P
TO A BOARD
CN0113
C528
33p
:CHIP
C529
33p
:CHIP
C2021
68p
:CHIP
R071
1k
:CHIP
C524
68p
:CHIP
C044
100p
:CHIP
R003
1k
:CHIP
L001
100μH
:EL0606
C2027
0.22
25V
F:CHIP
C018
2.2
16V
F:CHIP
C019
22
L2001
82μH
:EL0607
C2018
2.2
F:CHIP
C2008
0.22
25V
F:CHIP
R2016
47k
R2015
47k
R2004
330
:CHIP

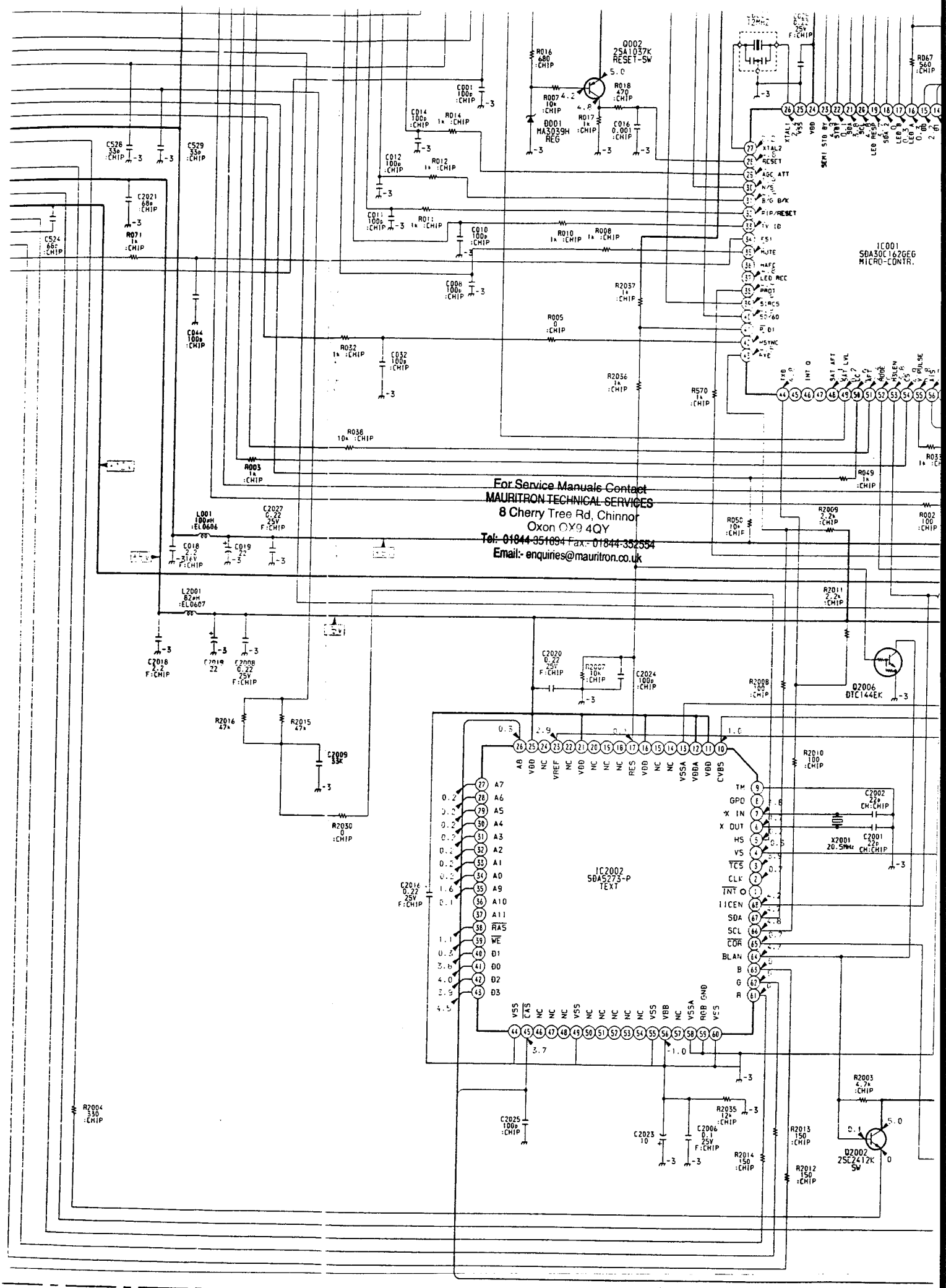

For Service Manuals Contact
MAURITRON TECHNICAL SERVICES
8 Cherry Tree Rd, Chinnor
Oxon OX9 4QY
Tel:- 01844 351694 Fax:- 01844 352554
Email:- enquiries@mauritron.co.uk

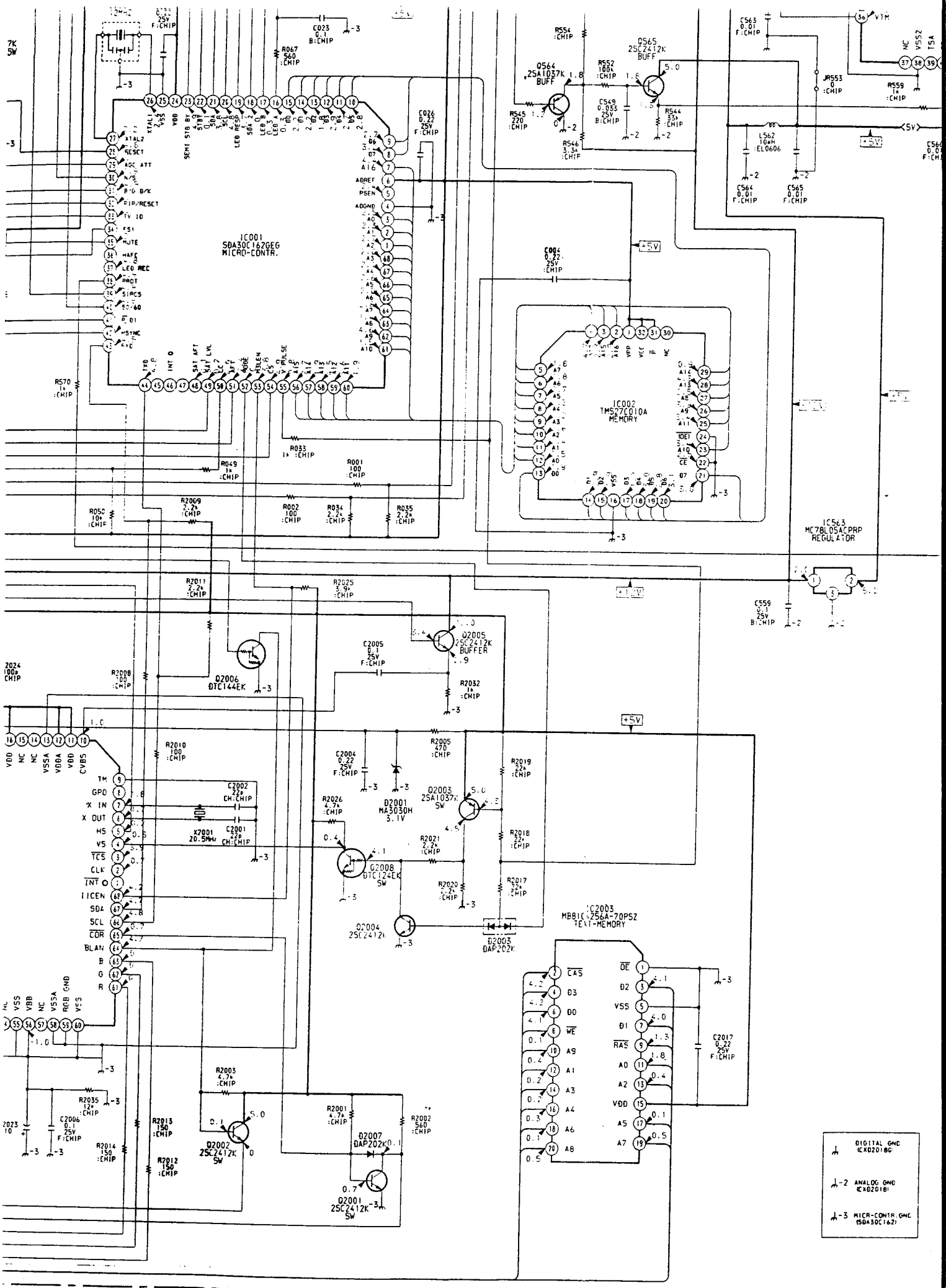
IC001
SDA30C162GEG
MICRO-CONTR.
IC002
TMS27C010A
MEMORY
IC563
MC78L05ACPRP
REGULATOR
IC2003
MB81C256A-70PSZ
TEXT-MEMORY
Q2005
2SC2412K
BUFFER
Q2006
DTC144EK
Q2003
2SA1037K
SW
Q2008
DTC124EK
SW
Q2004
2SC2412K
Q2002
2SC2412K
SW
Q2001
2SC2412K
SW
Q2007
DAP202K
D2003
DAP202K
D2001
MA3030H
5.1V
X2001
20.5MHz
Q564
2SA1037K
BUFF
Q565
2SC2412K
BUFF
DIGITAL GND
(CXD2018G)
ANALOG GND
(CXD2018)
MICR-CONTR.GND
(SDA30C162)

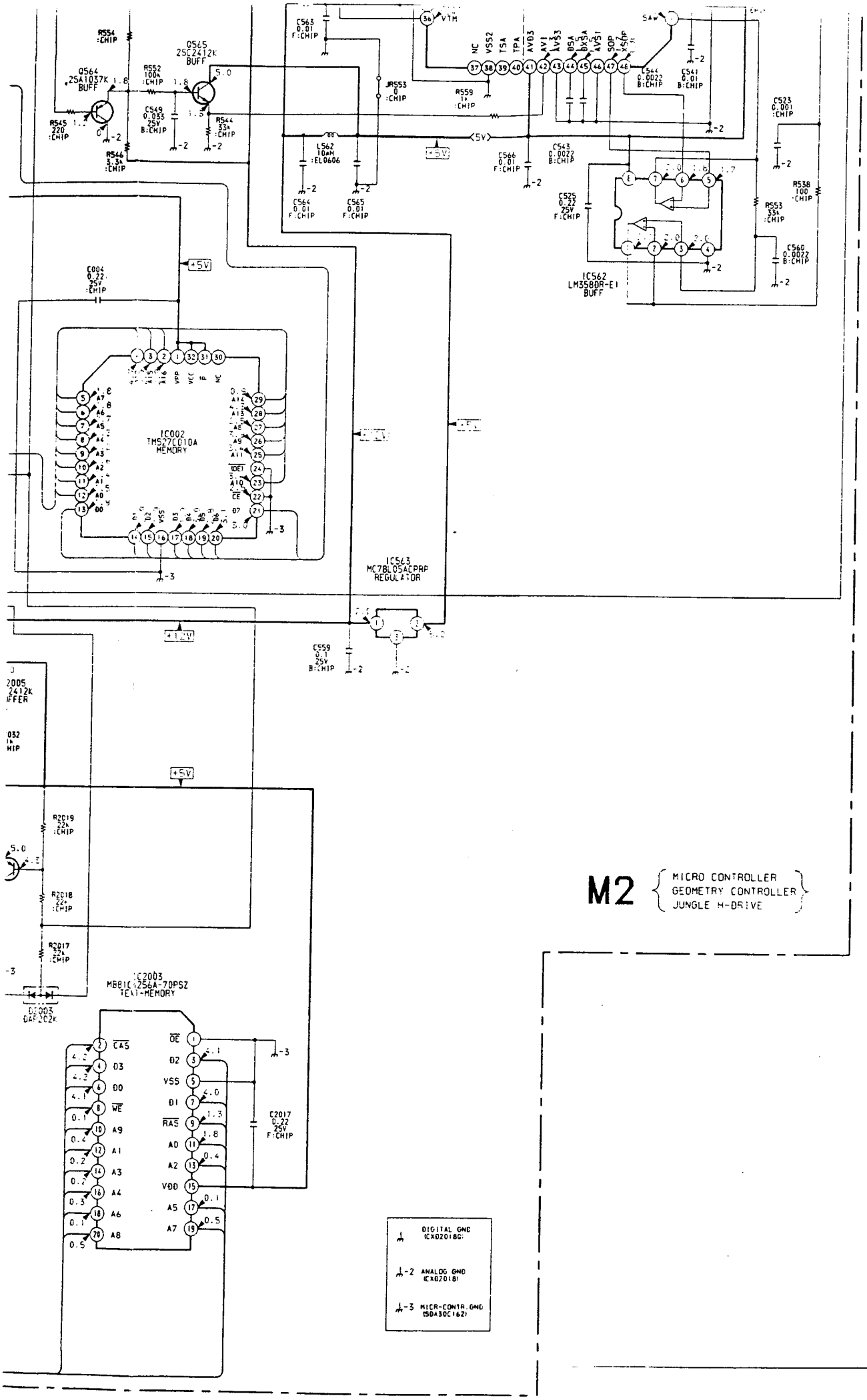
IC002
TMS27C010A
MEMORY
IC563
MC78L05ACPRP
REGULATOR
IC562
LM358DR-E1
BUFF
IC2003
MB81C4256A-70PSZ
TEXT-MEMORY
Q564
2SA1037K
BUFF
Q565
2SC2412K
BUFF
L562
10uH
:EL0606
+5V
+12V
M2
MICRO CONTROLLER
GEOMETRY CONTROLLER
JUNGLE H-DRIVE
DIGITAL GND
(CXD2018G)
ANALOG GND
(CXD2018)
MICR-CONTR. GND
(SDA30C162)

– M2 BOARD –

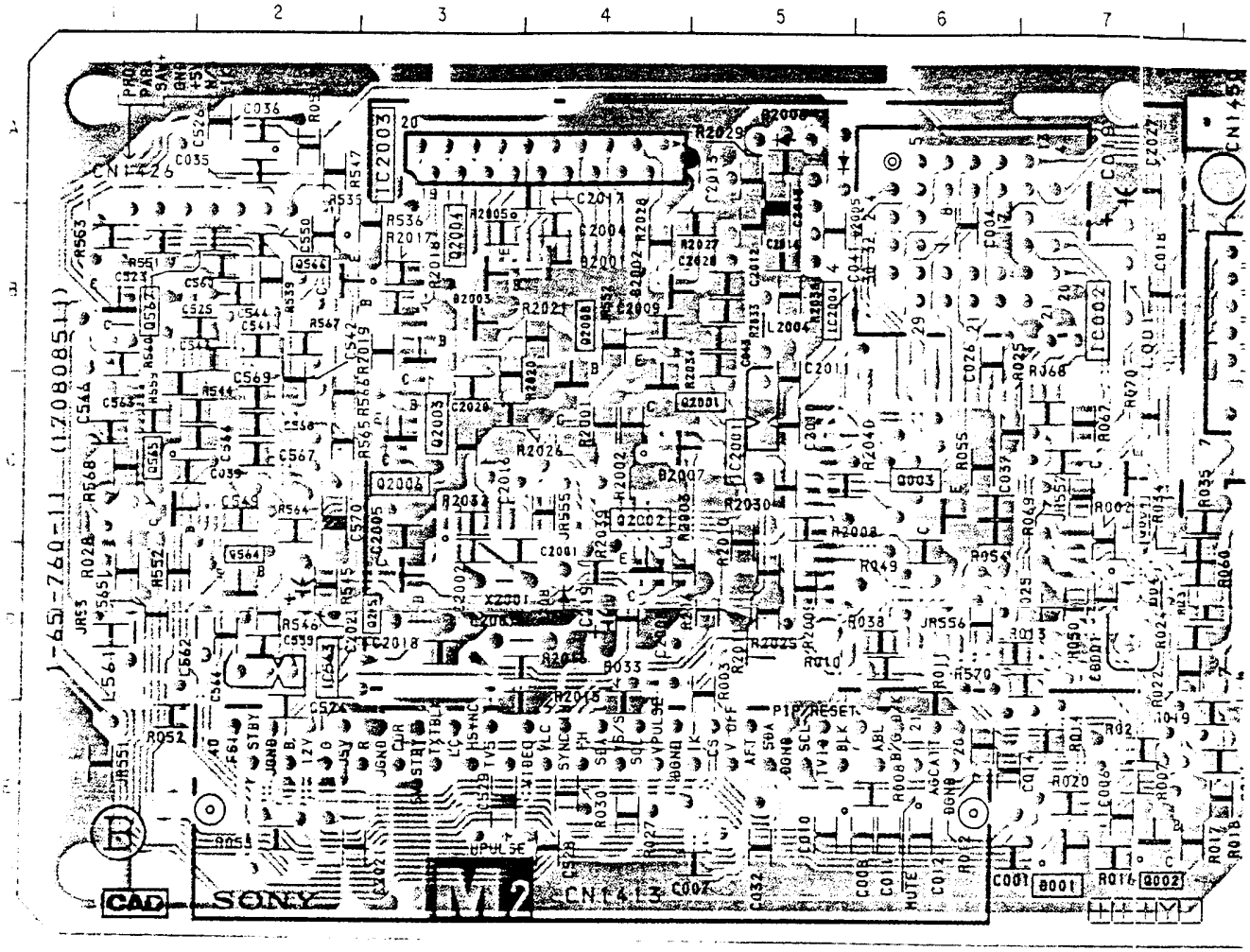
SONY
M2
CAD
CN413
IC2003
IC2002
IC2001
P1P/RESET
UPULSE

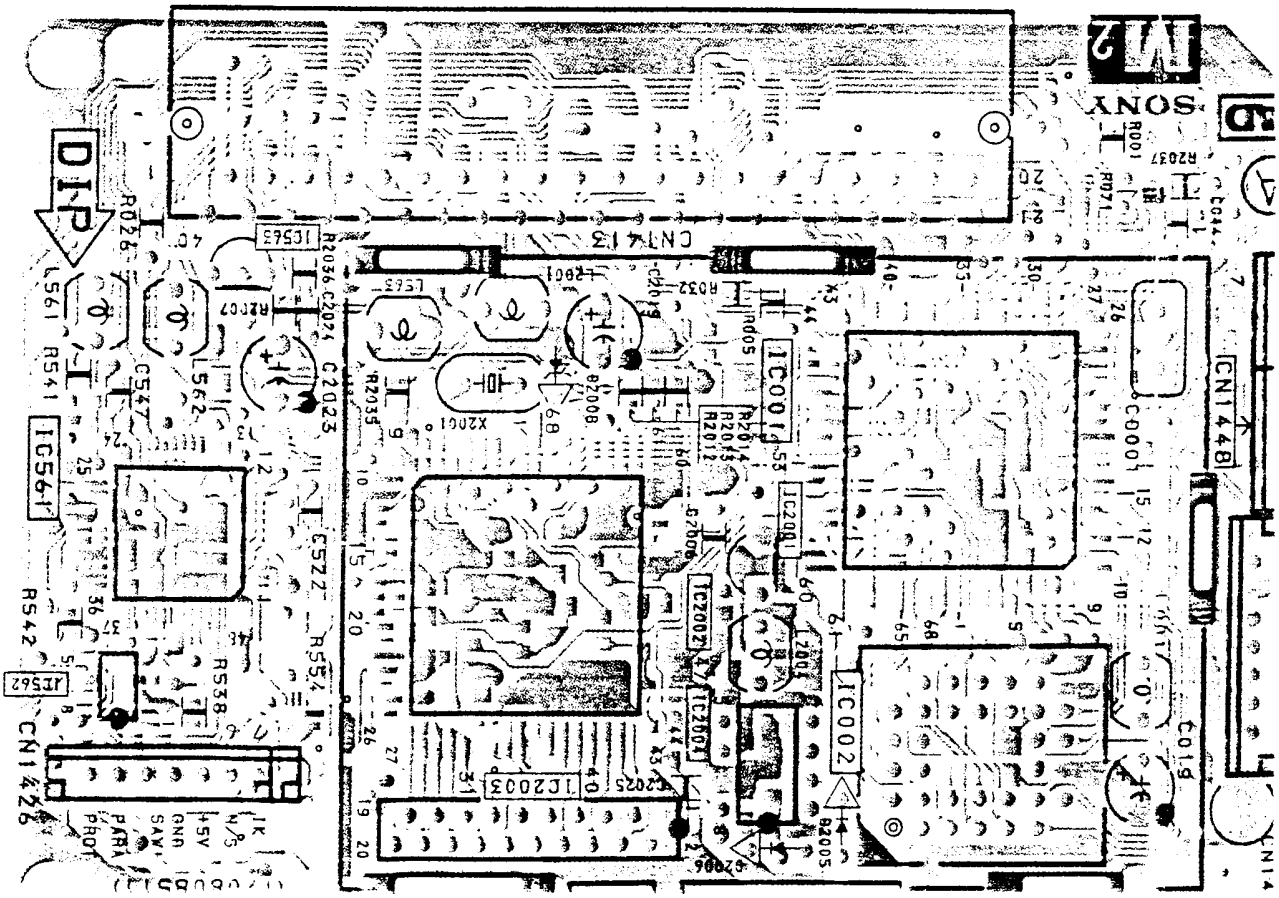
M2
SONY
DIP
CN413
IC001
IC002
IC2003
IC2001
IC2002
CN148
CN1426

H/V OUT, PIN OUT, POWER SUPPLY

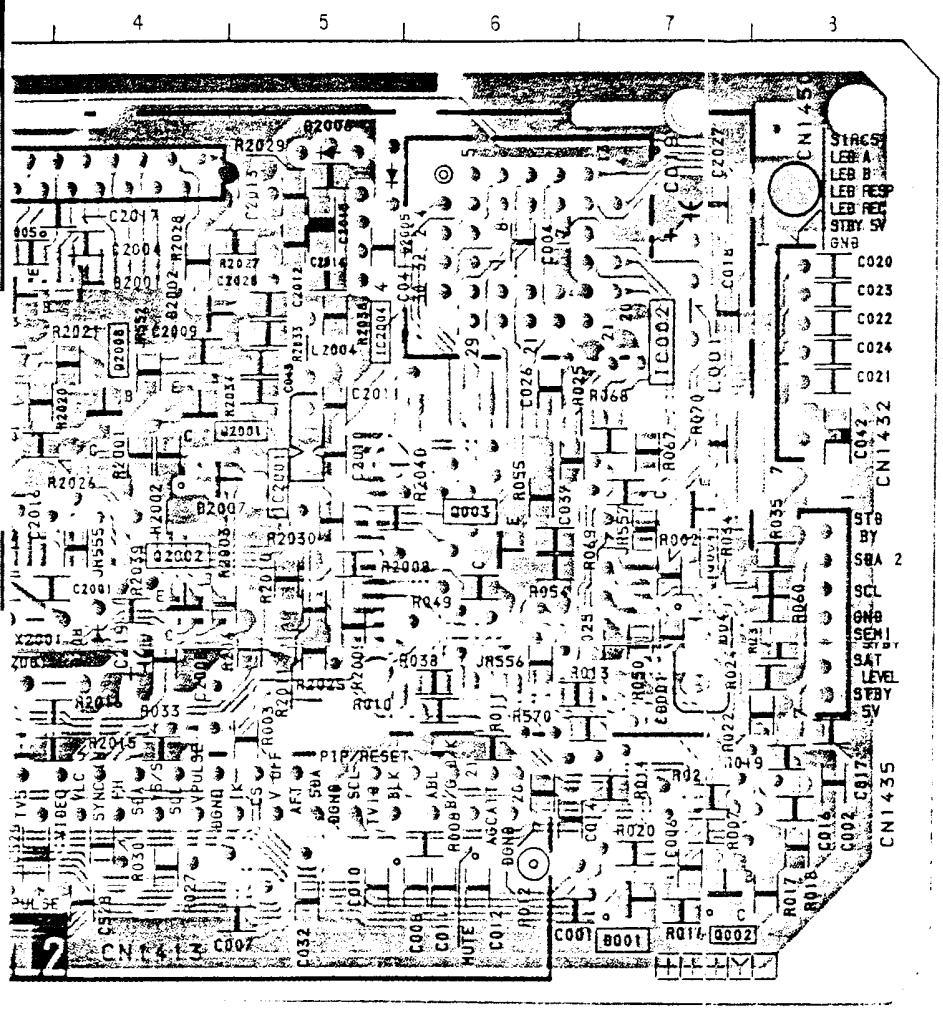

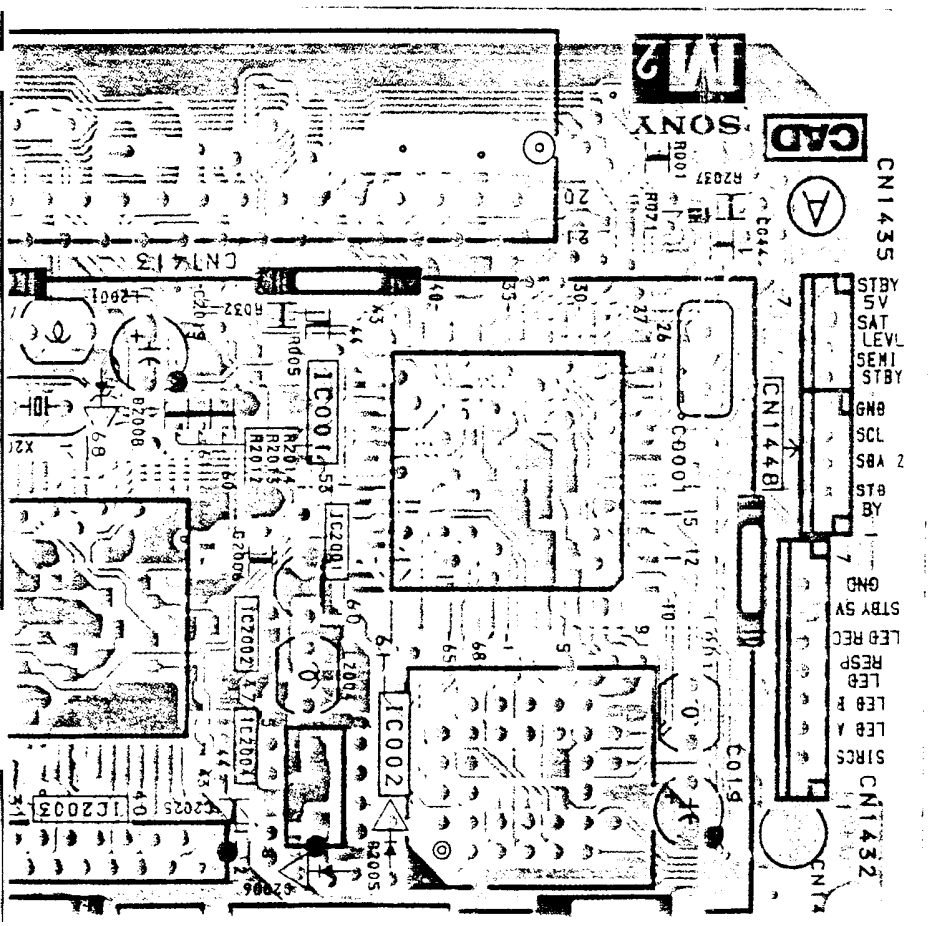

IC	
IC001	C – 3
IC002	B – 3, J – 3
IC561	C – 8
IC562	B – 8
IC563	D – 7, H – 7
IC2001	C – 4, I – 4
IC2002	C – 6
IC2003	B – 5, J – 6
IC2004	A – 4, J – 4

TRANSISTOR	
Q002	G – 2
Q003	I – 3
Q564	H – 7
Q565	I – 8
Q566	J – 7
Q567	J – 8
Q2001	I – 5
Q2002	J – 5
Q2003	I – 6
Q2005	H – 5
Q2006	K – 5
Q2008	I – 6

DIODE	
D001	G – 2
D2001	I – 5
D2002	J – 5
D2003	I – 6

IC	
IC001	C – 3
IC002	B – 3, J – 3
IC561	C – 8
IC562	B – 8
IC563	D – 7, H – 7
IC2001	C – 4, I – 4
IC2002	C – 6
IC2003	B – 5, J – 6
IC2004	A – 4, J – 4

TRANSISTOR	
Q002	G – 2
Q003	I – 3
Q564	H – 7
Q565	I – 8
Q566	J – 7
Q567	J – 8
Q2001	I – 5
Q2002	J – 5
Q2003	I – 6
Q2005	H – 5
Q2006	K – 5
Q2008	I – 6

DIODE	
D001	G – 2
D2001	I – 5
D2002	J – 5
D2003	I – 6

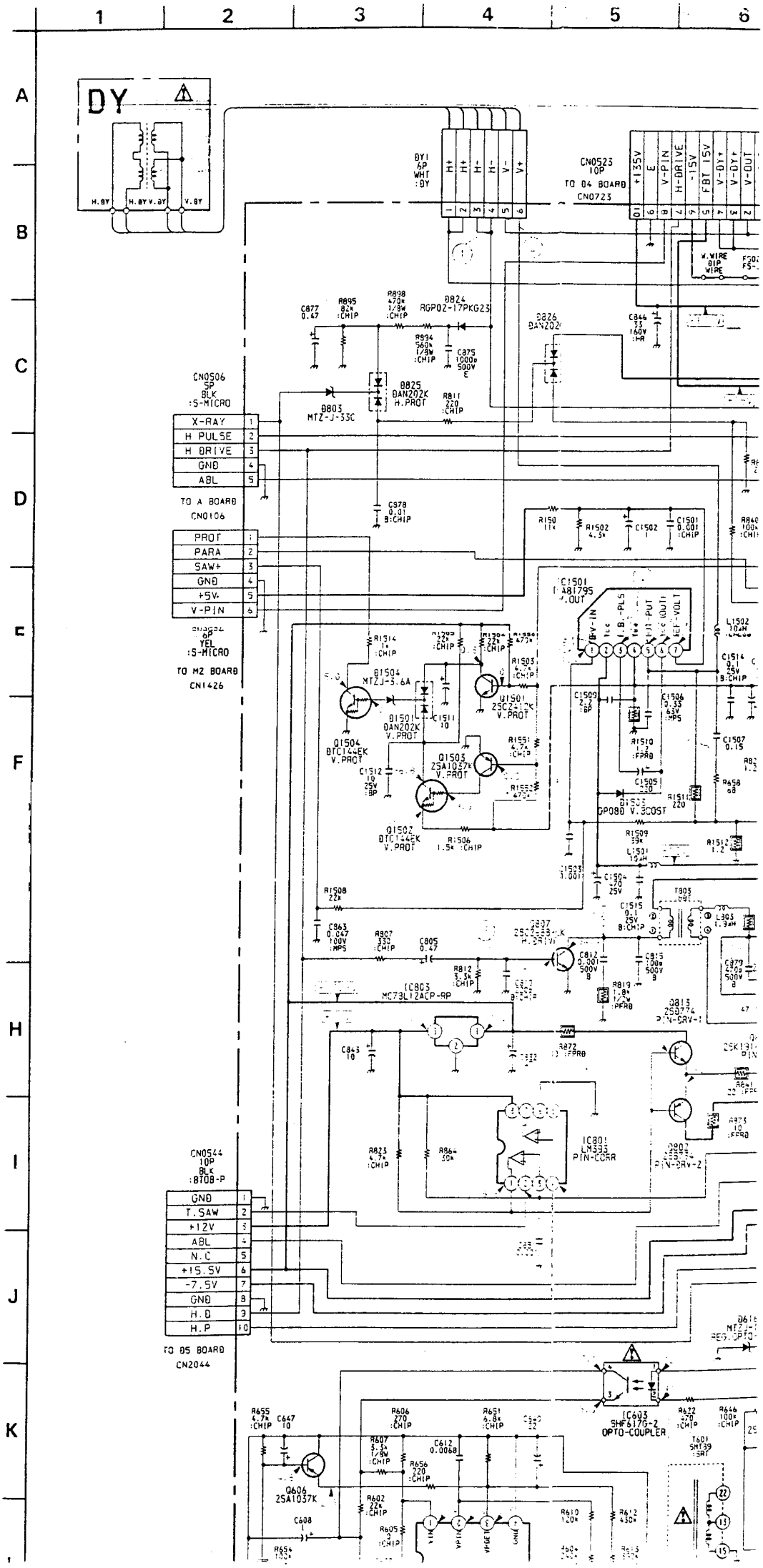

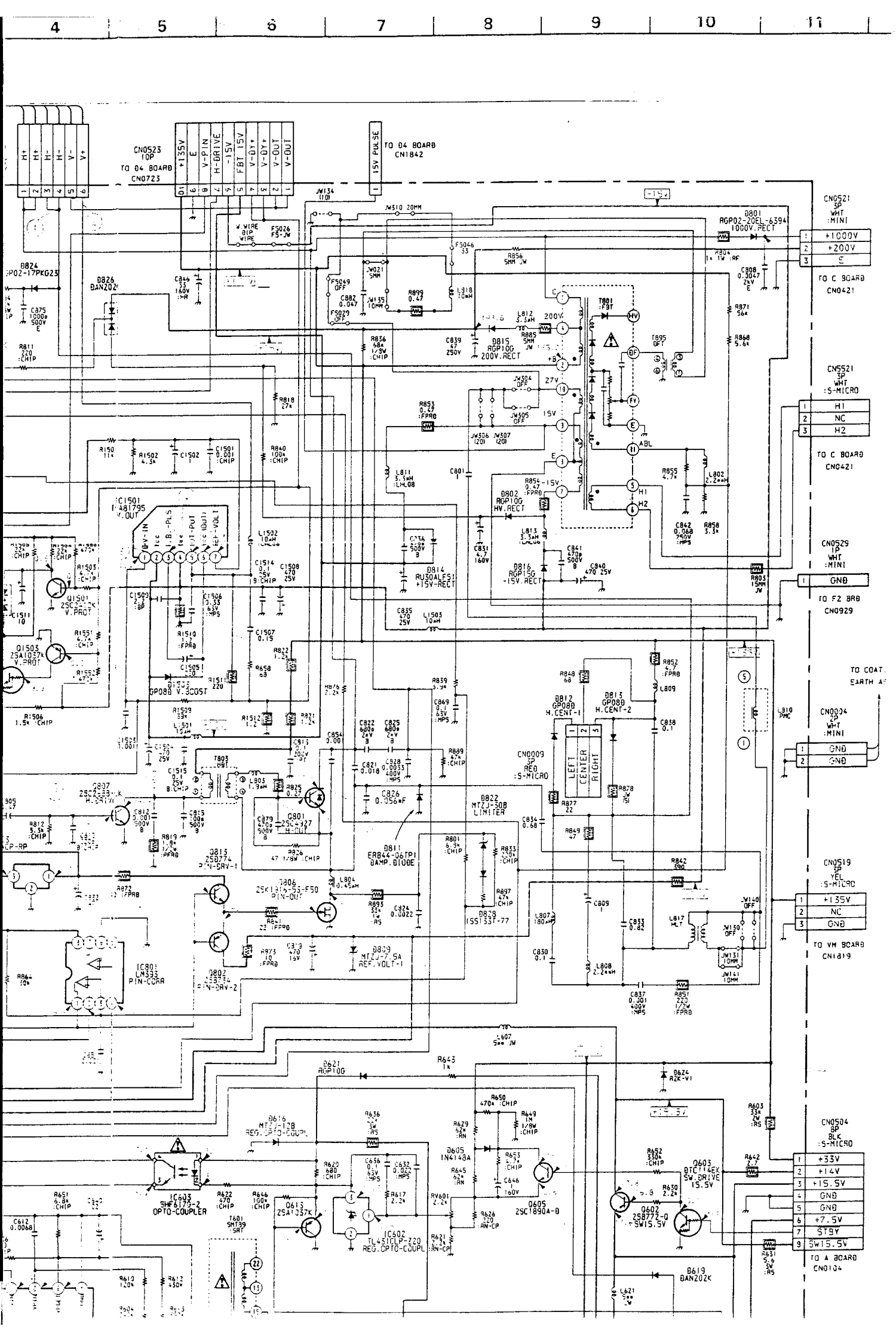
4
5
6
7
8
9
10
11
CN0523
10P
TO 04 BOARD
CN0723
TO 04 BOARD
CN1842
CN0521
3P
WHT
:MINI
+1000V
+200V
E
TO C BOARD
CN0421
CN5521
3P
WHT
:S-MICRO
H1
NC
H2
TO C BOARD
CN0421
CN0529
1P
WHT
:MINI
GND
TO F2 BRD
CN0929
TO COAT.
EARTH AF
CN0004
4P
WHT
:MINI
GND
GND
CN0519
3P
YEL
:S-MICRO
+135V
NC
GND
TO VM BOARD
CN1819
CN0504
8P
BLK
:S-MICRO
+33V
+14V
+15.5V
GND
GND
+7.5V
STBY
SW15.5V
TO A BOARD
CN0104
IC1501
LA1795
V.OUT
Q1501
2SC2-12K
V.PROT
Q1503
2SA1037K
V.PROT
Q1505
GP080
V.SCOST
Q807
2SC2333-K
H.DRIVE
Q801
2SC4327
H-OUT
Q815
2SD774
PIN-DRV-1
Q806
2SK1316-55-F50
PIN-OUT
Q802
2SD774
PIN-DRV-2
IC801
LM393
PIN-CORR
Q812
GP080
H.CENT-1
Q813
GP080
H.CENT-2
CN0009
3P
RED
:S-MICRO
LEFT
CENTER
RIGHT
D811
ERB44-06TP1
DAMP.DIODE
D822
MTZJ-5.6B
LIMITER
D801
RGP02-20EL-6394
1000V.RECT
D815
RGP10G
200V.RECT
D802
RGP10G
HV.RECT
D814
RU30ALFS1
+15V-RECT
D816
RGP15G
-15V.RECT
T801
FBT
D621
RGP10G
D616
MTZJ-12B
REG.OPTO-COUPL
IC603
SHF6173-2
OPTO-COUPLER
Q613
2SA1037K
IC602
TL431CLP-Z20
REG.OPTO-COUPL
Q605
2SC1890A-B
Q603
DTC114EK
SW.DRIVE
15.5V
Q602
2SB772-Q
SW15.5V
D619
BAN202K
D624
RZK-V1
D826
BAN202K
D824
RP02-17PKG23
D808
D809
MTZJ-7.5A
REF.VOLT-1
D807
1SS133T-77
D605
1N4148A
T601
SMT39
:SAT
T803
L810
PMC

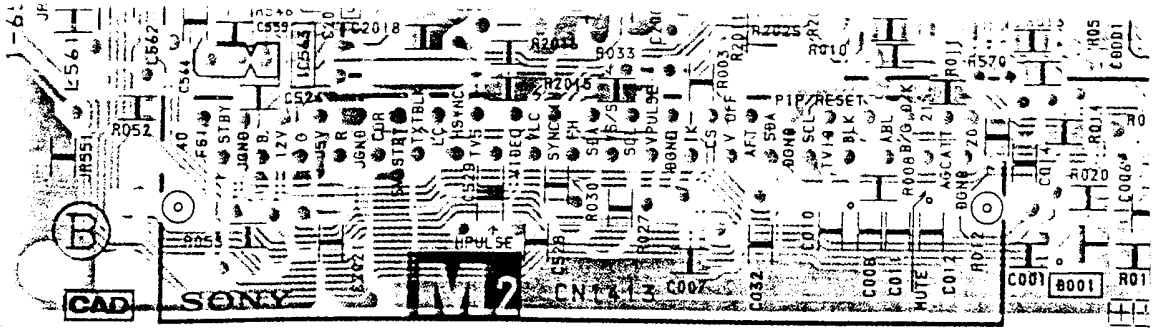

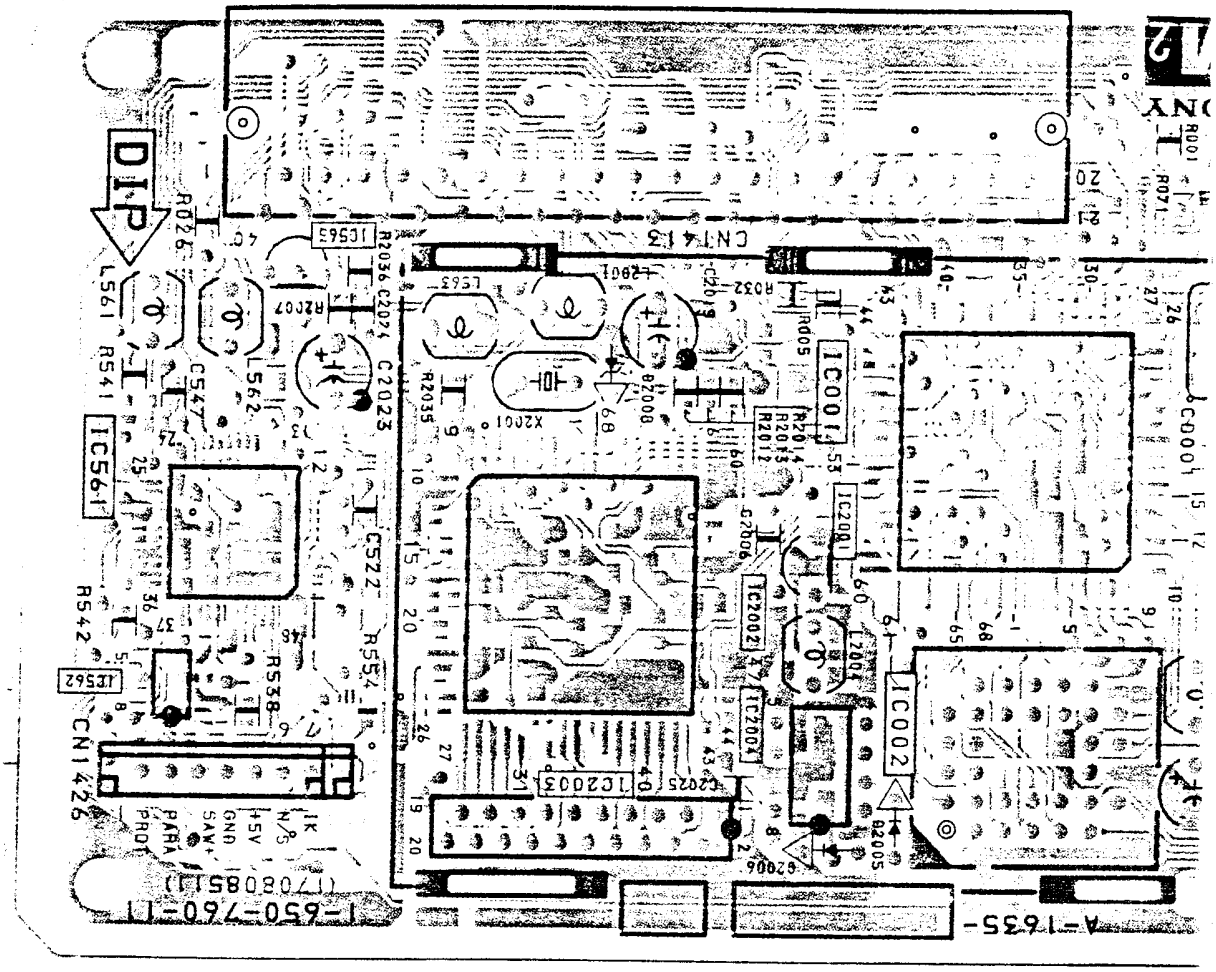

Note :

- : Pattern from the side which enables seeing.
- : Pattern of the rear side.

• WAVEFORMS D BO

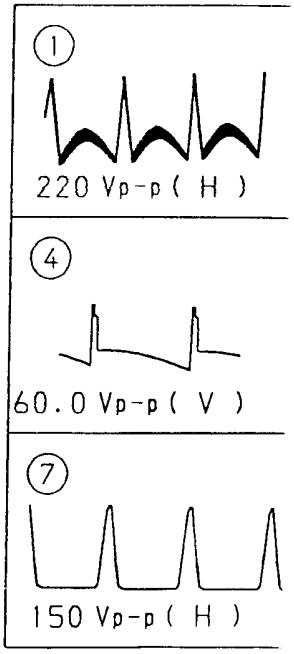

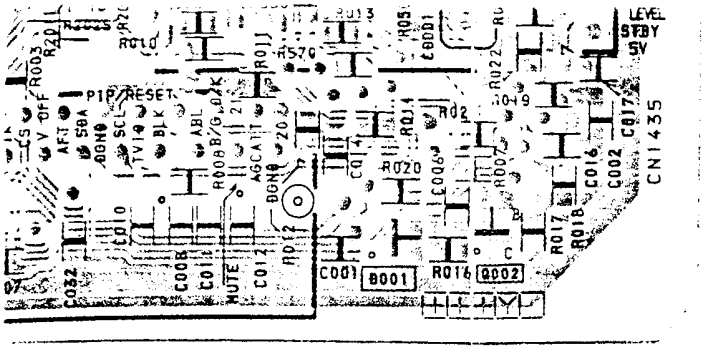

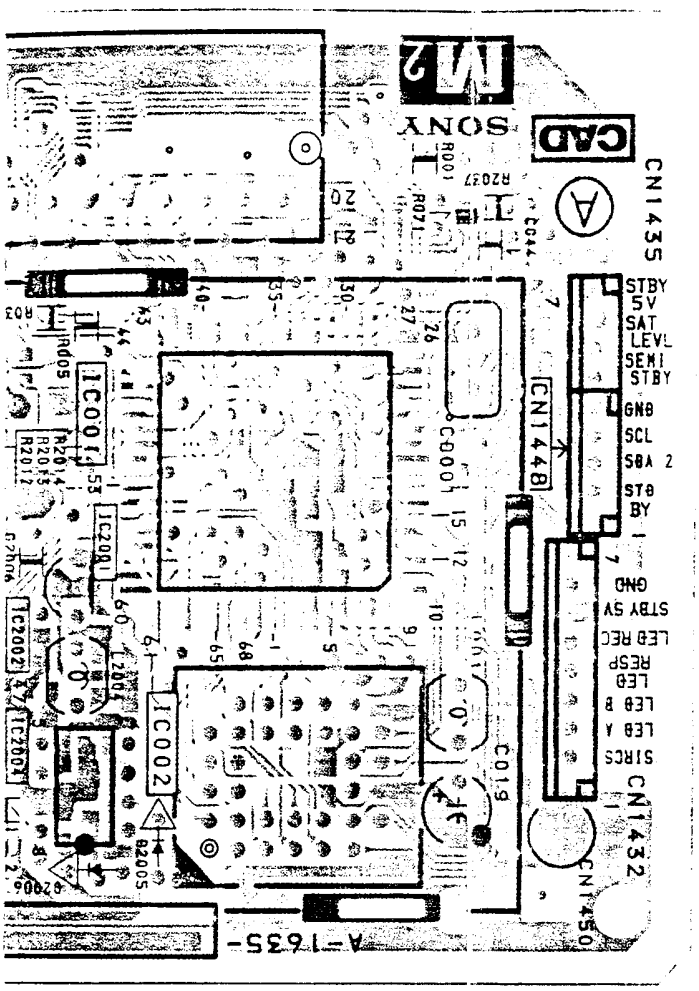

Q567	J - 8
Q2001	I - 5
Q2002	J - 5
Q2003	I - 6
Q2005	H - 5
Q2006	K - 5
Q2008	I - 6

DIODE	
D001	G - 2
D2001	I - 5
D2002	J - 5
D2003	I - 6

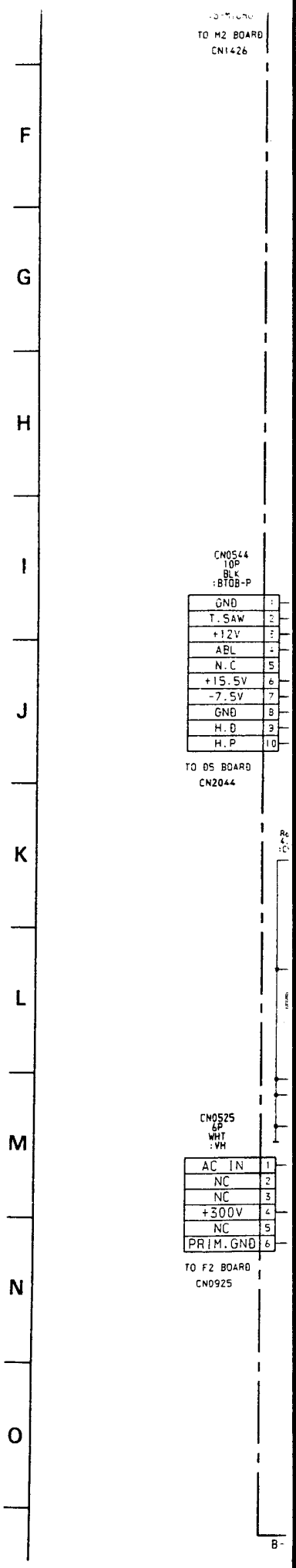

• WAVEFORMS D BOARD

① 220 Vp-p (H)	② 2.8 Vp-p (V)	③ 0.5 Vp-p (V)
④ 60.0 Vp-p (V)	⑤ 3.0 Vp-p (H)	⑥ 175 Vp-p (H)
⑦ 150 Vp-p (H)	⑧ 950 Vp-p (H)	⑨ 19.0 Vp-p (H)

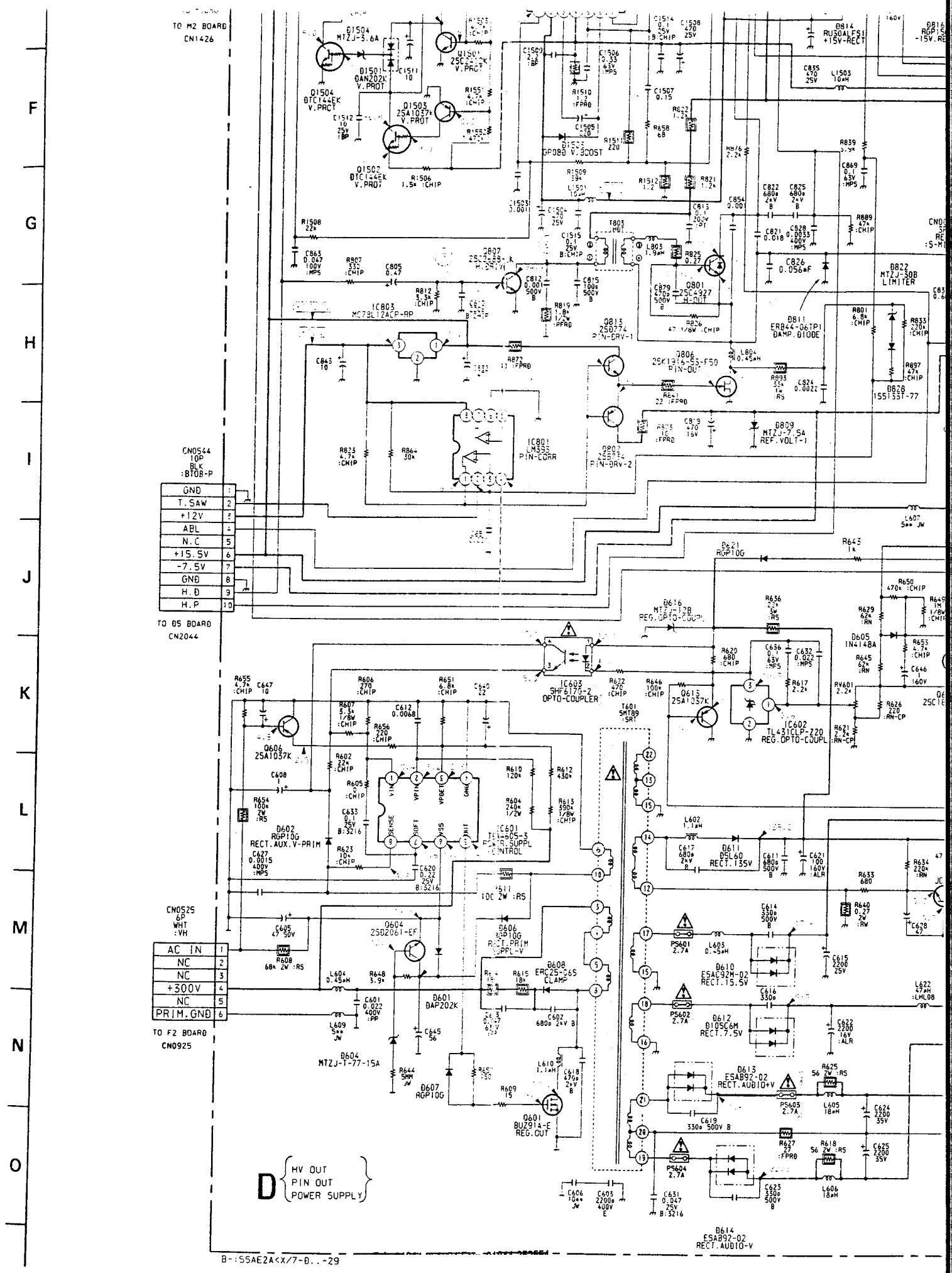
TO M2 BOARD
CN1426
CN0544
10P
BLK
:BT08-P
GND
T.SAW
+12V
ABL
N.C
+15.5V
-7.5V
GND
H.D
H.P
TO 05 BOARD
CN2044
CN0525
6P
WHT
:VH
AC IN
NC
NC
+300V
NC
PRIM.GND
TO F2 BOARD
CN0925
IC803
MC78L12ACP-RP
IC801
LM339
PIN-CORR
Q813
2SD774
PIN-DRV-1
Q802
2SD774
PIN-DRV-2
Q806
2SK1316-55-F50
PIN-OUT
Q801
2SC4927
H-OUT
Q807
2SC2688-L-K
H.DRIVE
T805
HOT
D811
ERB44-06TP1
DAMP.DIODE
D822
MTZJ-30B
LIMITER
D814
RU30ALFS1
+15V-RECT
D809
MTZJ-7.5A
REF.VOLT-1
D616
MTZJ-12B
REG.OPTO-COUPL
IC603
SHF6170-2
OPTO-COUPLER
IC602
TL431CLP-Z20
REG.OPTO-COUPL
Q606
2SA1037K
Q613
2SA1037K
D602
RGP10G
RECT.AUX.V-PRIM
IC601
TEL4605-3
POWER SUPPL
CONTROL
Q604
2SD2061-EF
D606
RGP10G
RECT.PRIM
SUPPL-V
D608
ERC25-06S
CLAMP
D601
DAPZ02K
D604
MTZJ-T-77-15A
D607
RGP10G
Q601
BUZ91A-E
REG.OUT
D610
ESAC92M-02
RECT.15.5V
D612
D10SC6M
RECT.7.5V
D613
ESAB92-02
RECT.AUDIO+V
D614
ESAB92-02
RECT.AUDIO-V
D611
D5L60
RECT.135V
D605
1N4148A
D621
RGP10G
D820
1SS133T-77
D
HV OUT
PIN OUT
POWER SUPPLY
B-:SSAE2A<X/7-0..-29

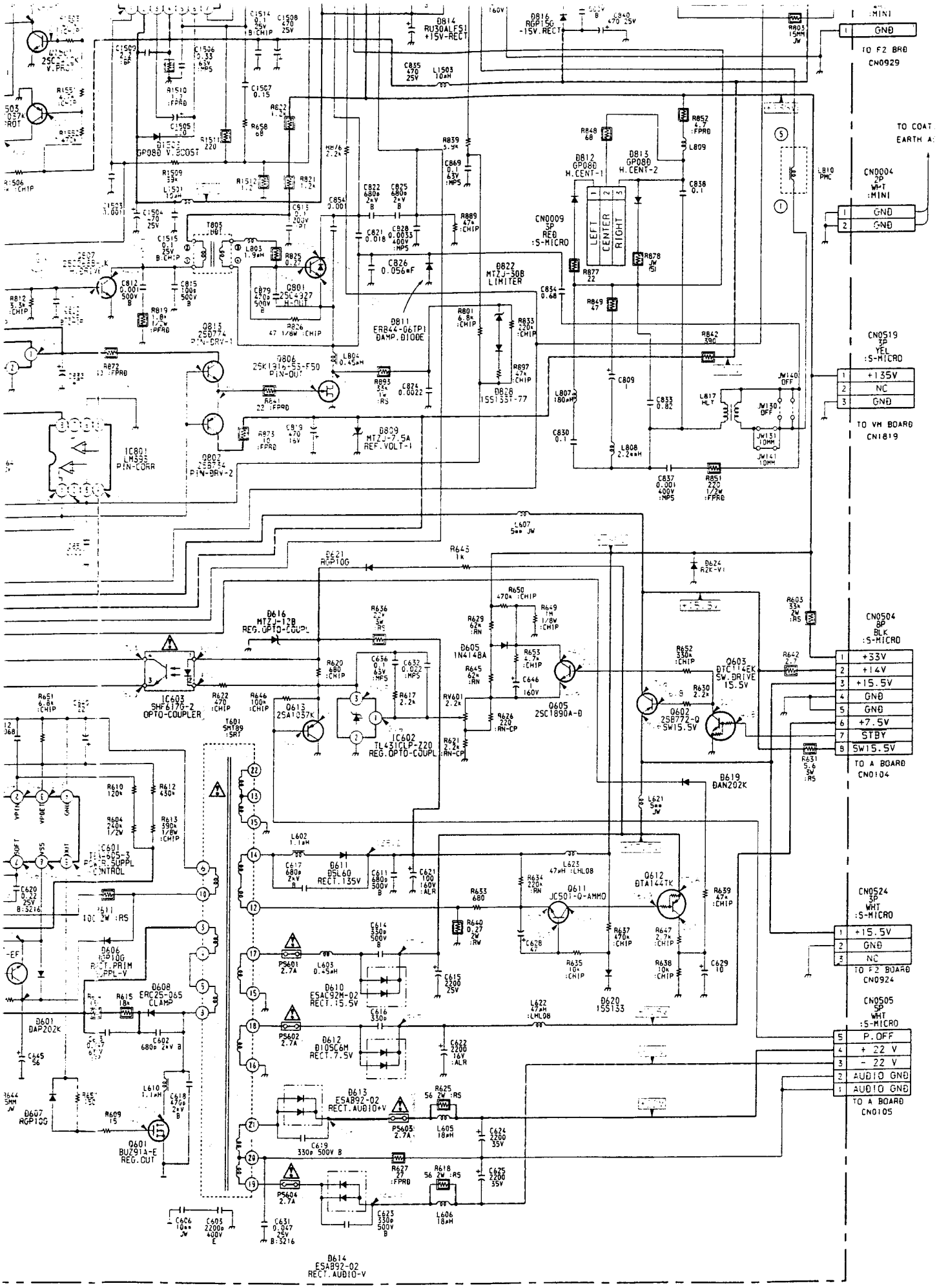
CN0929
TO F2 BRD
CN0004
2P
WHT
:MINI
GND
GND
TO COAT
EARTH A
CN0519
3P
YEL
:S-MICRO
+13.5V
NC
GND
TO VM BOARD
CN1819
CN0504
8P
BLK
:S-MICRO
+33V
+14V
+15.5V
GND
GND
+7.5V
STBY
SW15.5V
TO A BOARD
CN0104
CN0524
3P
WHT
:S-MICRO
+15.5V
GND
NC
TO F2 BOARD
CN0924
CN0505
5P
WHT
:S-MICRO
P.OFF
+ 22 V
- 22 V
AUDIO GND
AUDIO GND
TO A BOARD
CN0105
D814
RU30ALFS1
+15V-RECT
D816
RGP15G
-15V.RECT
D812
GP08D
H.CENT-1
D813
GP08D
H.CENT-2
LEFT
CENTER
RIGHT
CN0009
3P
RED
:S-MICRO
D822
MTZJ-30B
LIMITER
D811
ERB44-06TP1
DAMP.DIODE
Q801
2SC4927
H-OUT
Q815
2SD774
PIN-DRV-1
Q806
2SK1316-53-F50
PIN-OUT
Q802
2SB734
PIN-DRV-2
IC801
LM393
PIN-CORR
D809
MTZJ-7.5A
REF.VOLT-1
D828
1SS133T-77
D616
MTZJ-12B
REG.OPTO-COUPL
IC603
SHF6176-2
OPTO-COUPLER
Q613
2SA1037K
IC602
TL431CLP-Z20
REG.OPTO-COUPL
D605
1N4148A
Q605
2SC1890A-B
Q603
DTC114EK
SW.DRIVE
15.5V
Q602
2SB772-Q
SW15.5V
D619
DAN202K
D621
RGP10G
D624
R2K-V
IC601
TL494CN-3
PWM-SUPPL
CONTROL
D606
RGP10G
RECT.PRIM
SUPPL-V
D608
ERC25-06S
CLAMP
D601
DAP202K
D607
RGP10G
Q601
BUZ91A-E
REG.OUT
D611
DSL60
RECT.135V
Q611
2SC501-O-AMMO
Q612
DTA144TK
D610
ESAC92M-02
RECT.15.5V
D612
D10SC6M
RECT.7.5V
D613
ESAB92-02
RECT.AUDIO+V
D614
ESAB92-02
RECT.AUDIO-V
D620
1SS133
PS401
2.7A
PS402
2.7A
PS603
2.7A
PS604
2.7A

– D BOARD –

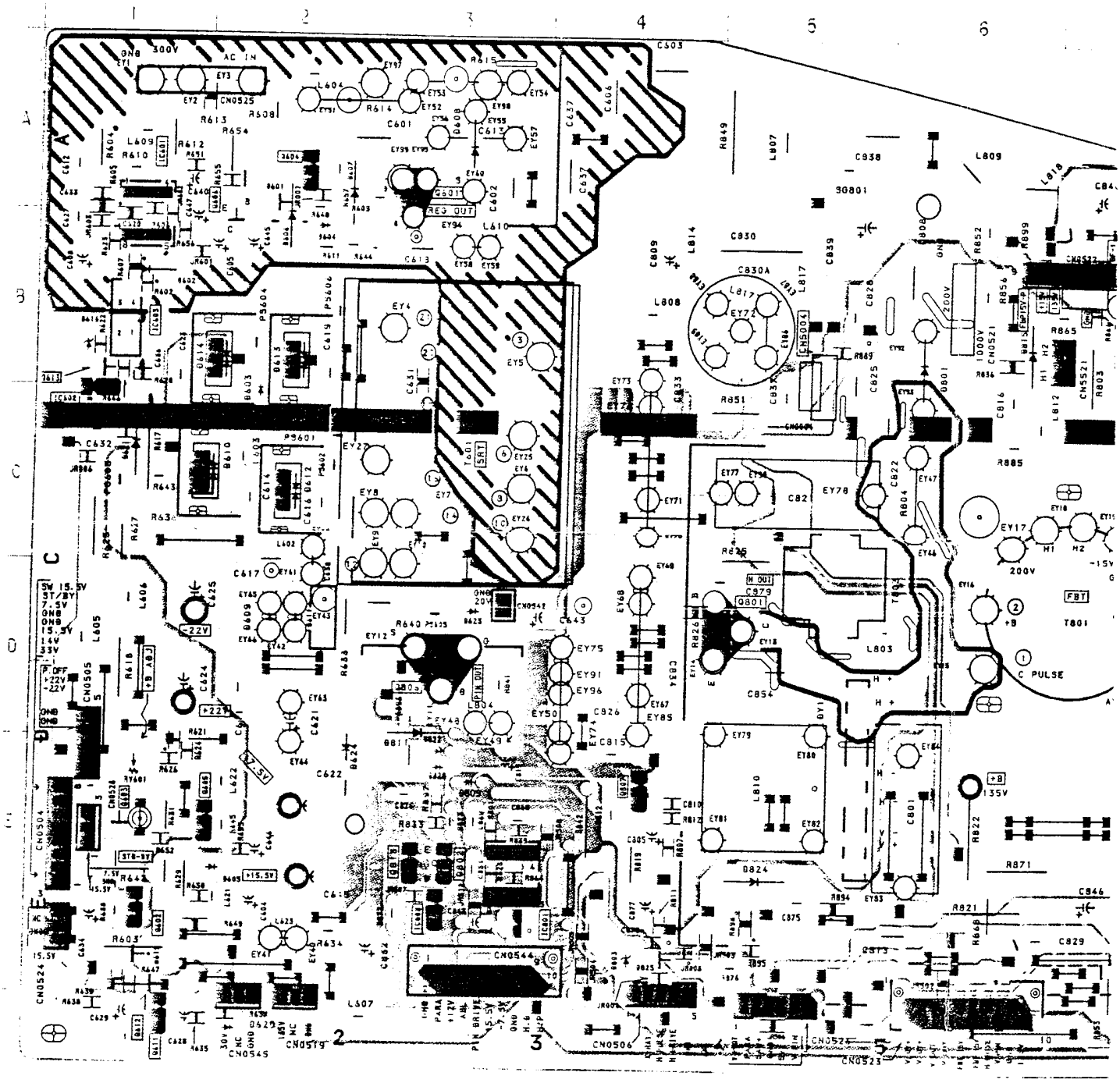

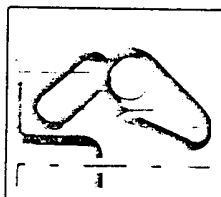

NOTE:
The circuit indicated as left contains high voltage of over 600 Vp-p. Care must be paid to prevent an electric shock in inspection or repairing.

Note :

- : Pattern from the side which enables seeing.
- : Pattern of the rear side.

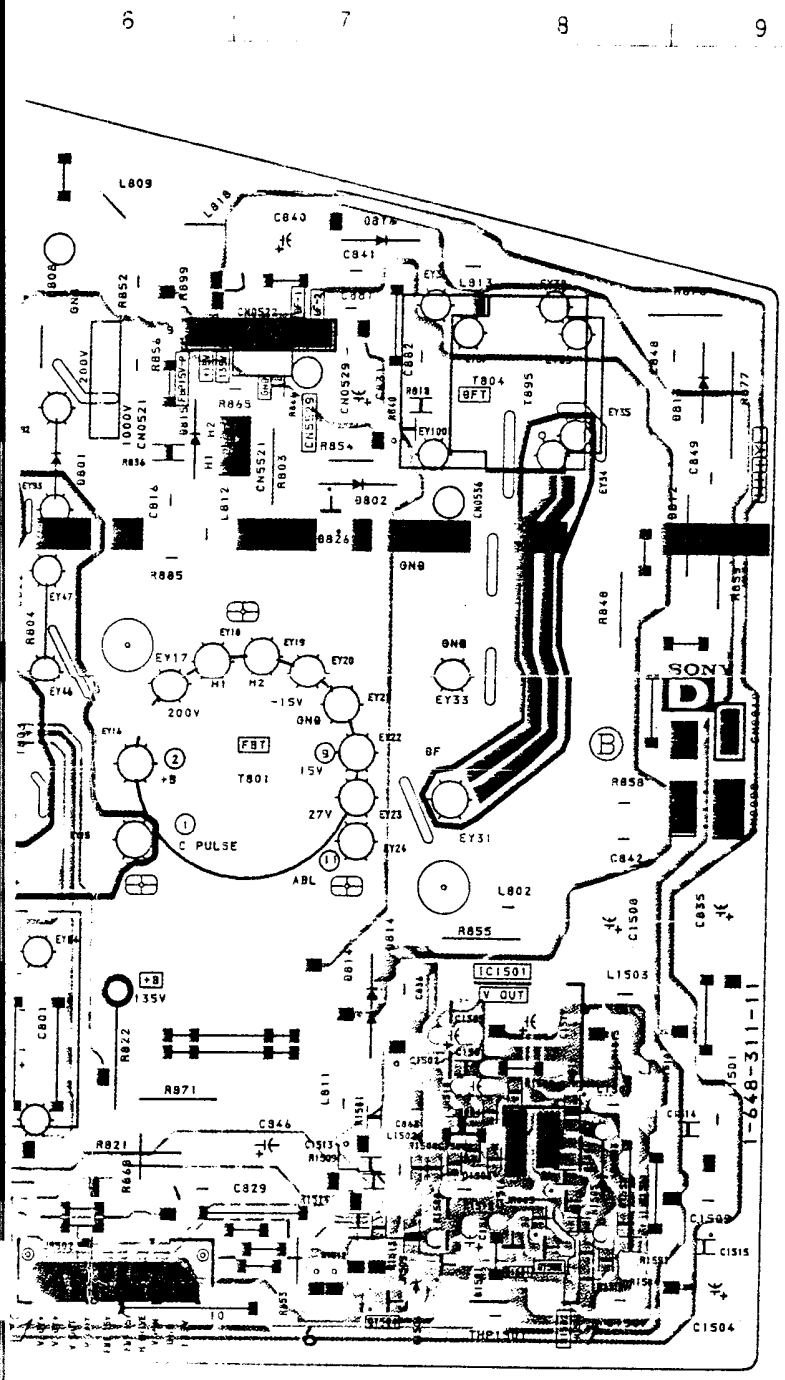

IC	
IC601	A - 1
IC602	C - 1
IC603	B - 1
IC801	E - 3
IC803	F - 3
IC1501	E - 8

TRANSISTOR	
Q601	A - 3
Q602	F - 1
Q603	E - 1
Q604	A - 2
Q605	E - 2

D607	A - 2
D608	A - 3
D610	C - 2
D611	D - 2
D612	C - 2
D613	B - 2
D614	B - 2
D616	B - 1
D619	F - 1
D620	F - 2
D621	C - 1
D624	E - 2
D801	B - 6
D802	B - 7
D803	F - 4
D809	E - 3

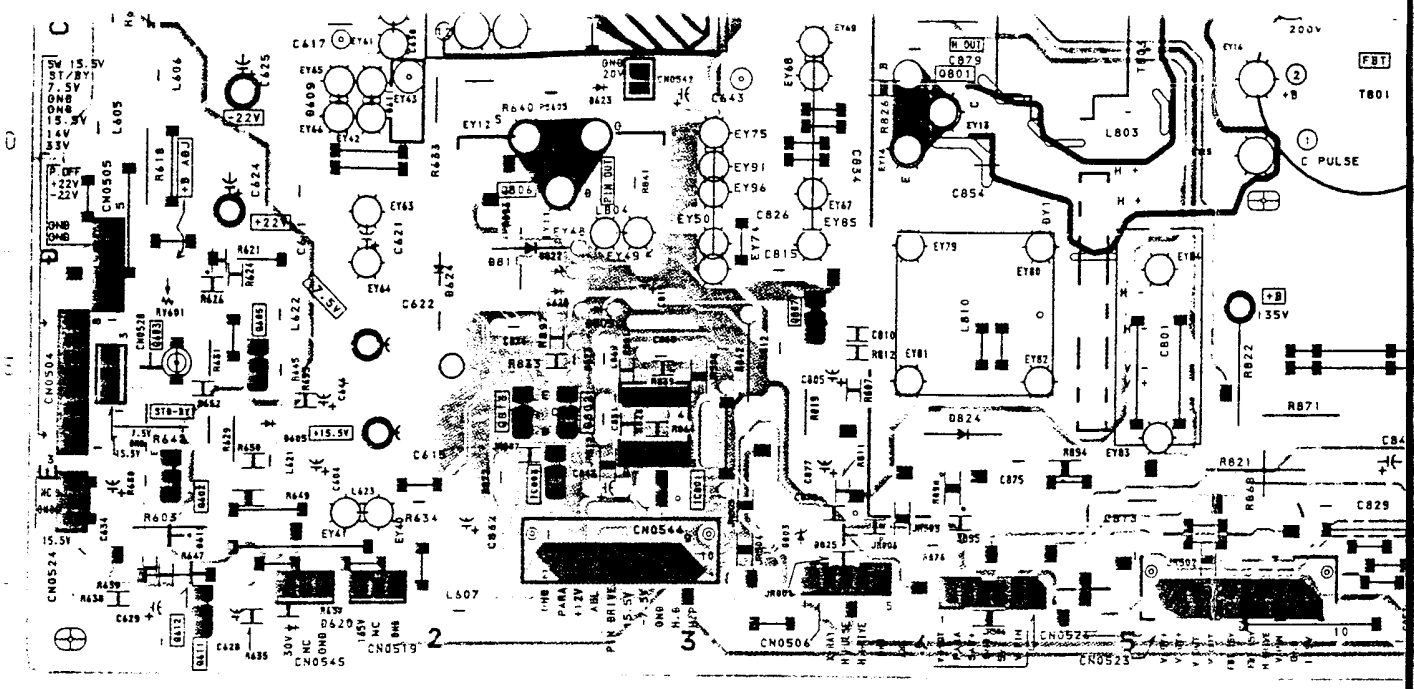

NOTE:
The circuit indicated as left contains high voltage of over 600 Vp-p. Care must be paid to prevent an electric shock in inspection or repairing.

• D BOARD IC601 TDA4605-3

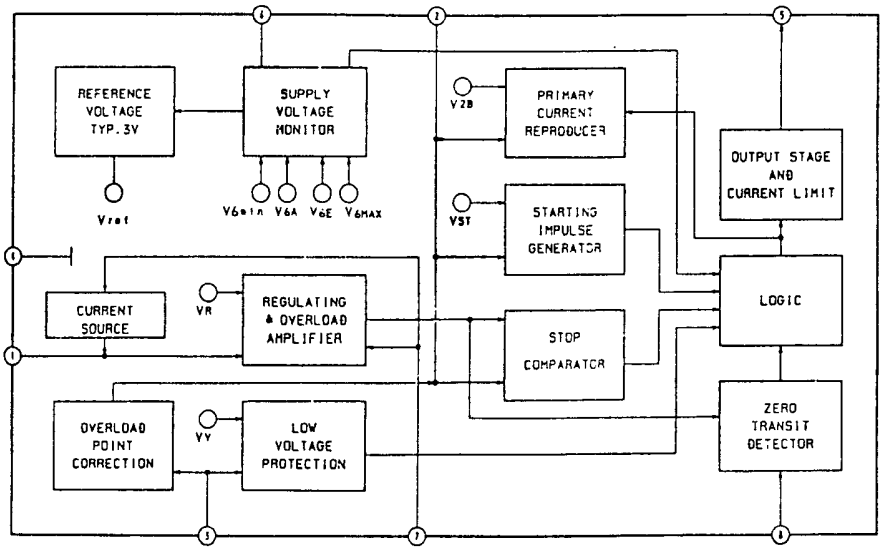

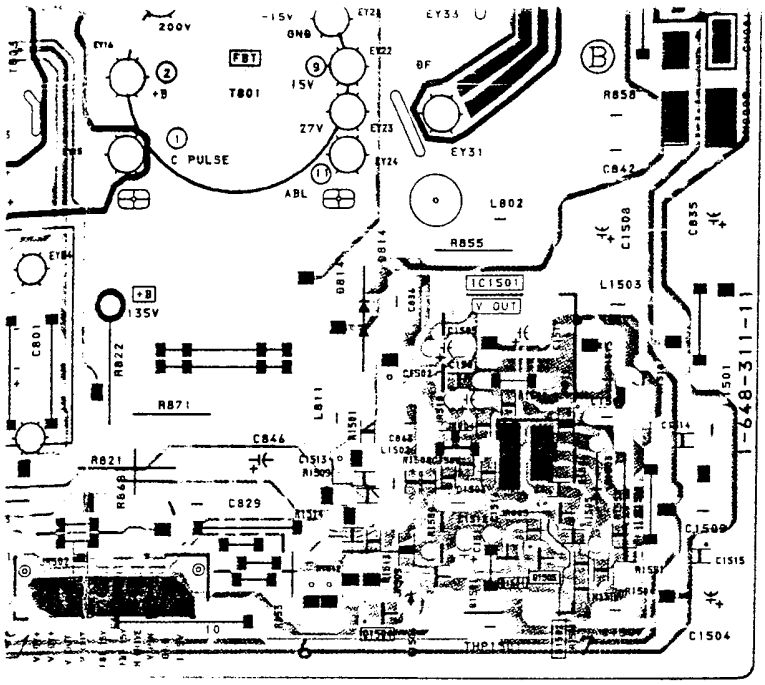

IC	
IC601	A - 1
IC602	C - 1
IC603	B - 1
IC801	E - 3
IC803	F - 3
IC1501	E - 8

TRANSISTOR	
Q601	A - 3
Q602	F - 1
Q603	E - 1
Q604	A - 2
Q605	E - 2
Q606	B - 2
Q611	F - 1
Q612	F - 1
Q613	B - 1
Q801	D - 5
Q802	E - 3
Q806	D - 3
Q807	E - 4
Q813	E - 3
Q1501	F - 8
Q1502	F - 8
Q1503	F - 8
Q1504	F - 7

DIODE	
D601	A - 2
D602	B - 1
D604	B - 2
D605	E - 2
D606	B - 2
D607	A - 2
D608	A - 3
D610	C - 2
D611	D - 2
D612	C - 2
D613	B - 2
D614	B - 2
D616	B - 1
D619	F - 1
D620	F - 2
D621	C - 1
D624	E - 2
D801	B - 6
D802	B - 7
D803	F - 4
D809	E - 3
D811	D - 3
D812	C - 9
D813	B - 9
D814	E - 7
D815	B - 6
D816	A - 7
D822	E - 3
D824	E - 5
D825	F - 4
D826	C - 7
D828	E - 3
D1501	F - 8
D1503	F - 8
D1504	F - 7

VARIABLE RESISTOR	
RV601	E - 1

(Spanish, UK

CN0201
20P
WHT
BTGB-P

R OUT	1
GND	2
GND	3
RIN	4
GND	5
GND	6
SCL	7
SIF	8
GND	9
GND	10
12V	11
5V	12
GND	13
GND	14
SDA	15
L IN	16
GND	17
GND	18
L OUT	19
GND	20

TO A BOARD
CN0101

TO 04 BOARD
CN1811

Q.P.	1
NC	2
Q.P.	3

(Spanish, UK Model only)

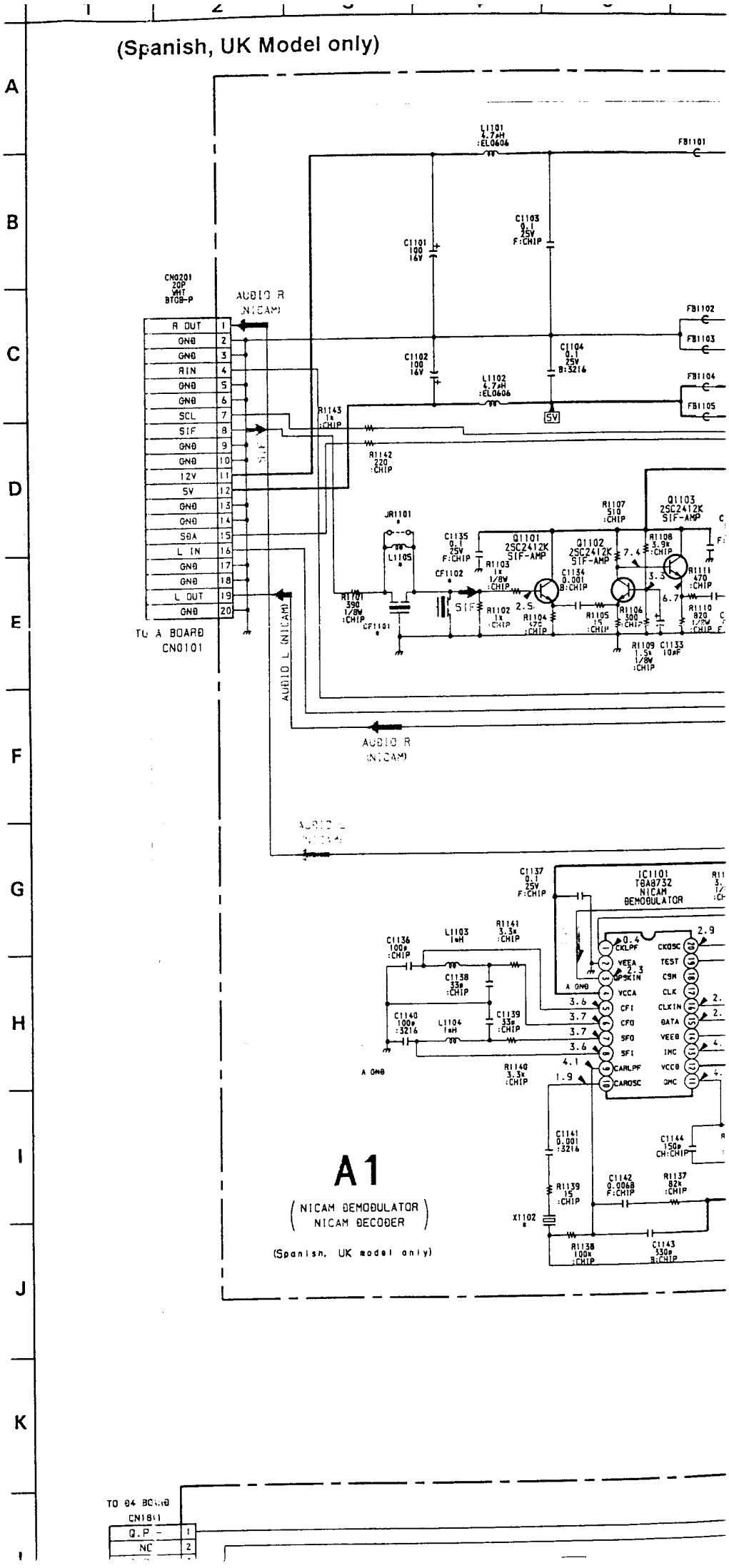

odel only)

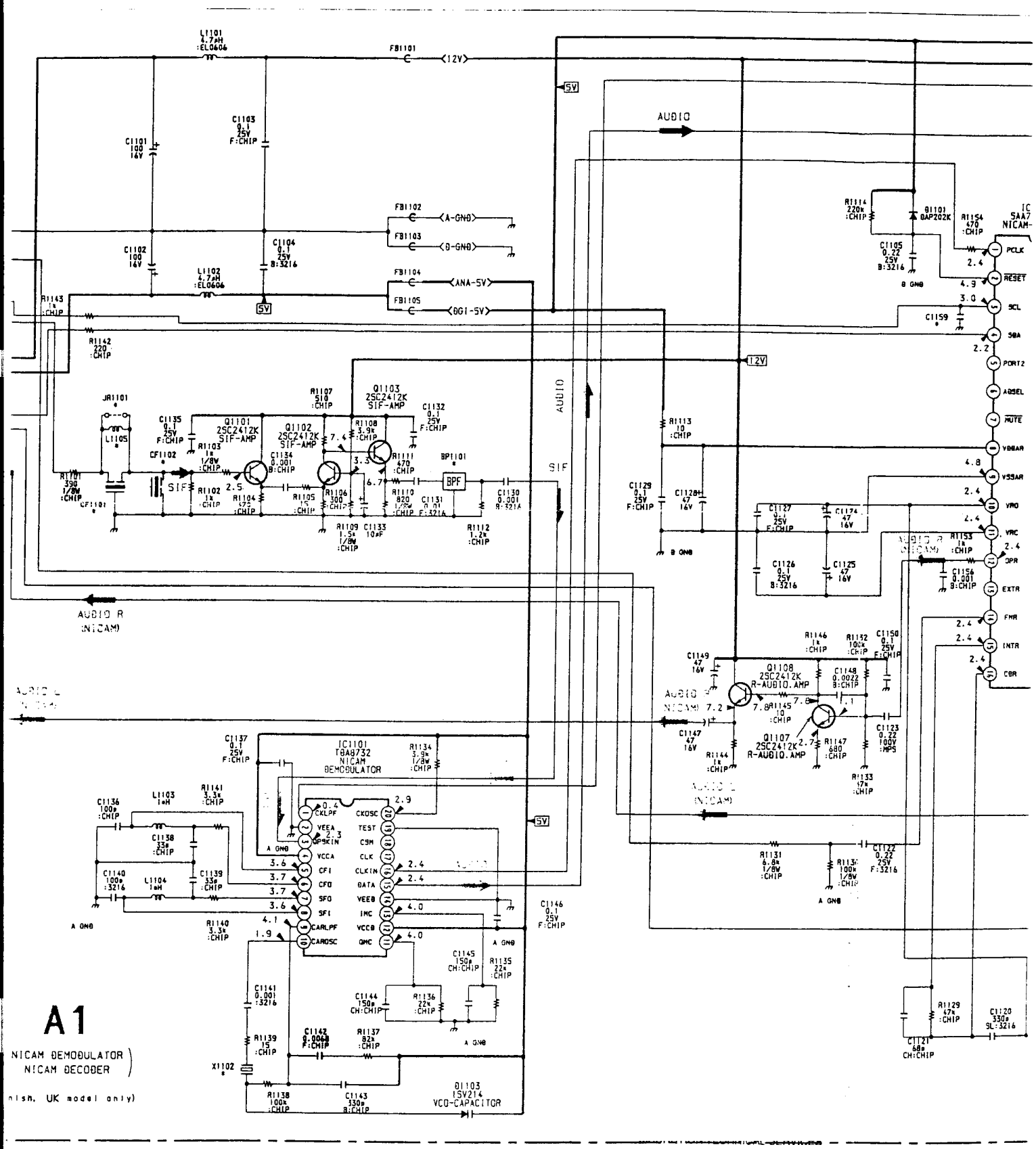

A1

NICAM DEMODULATOR
NICAM DECODER

nish, UK model only)

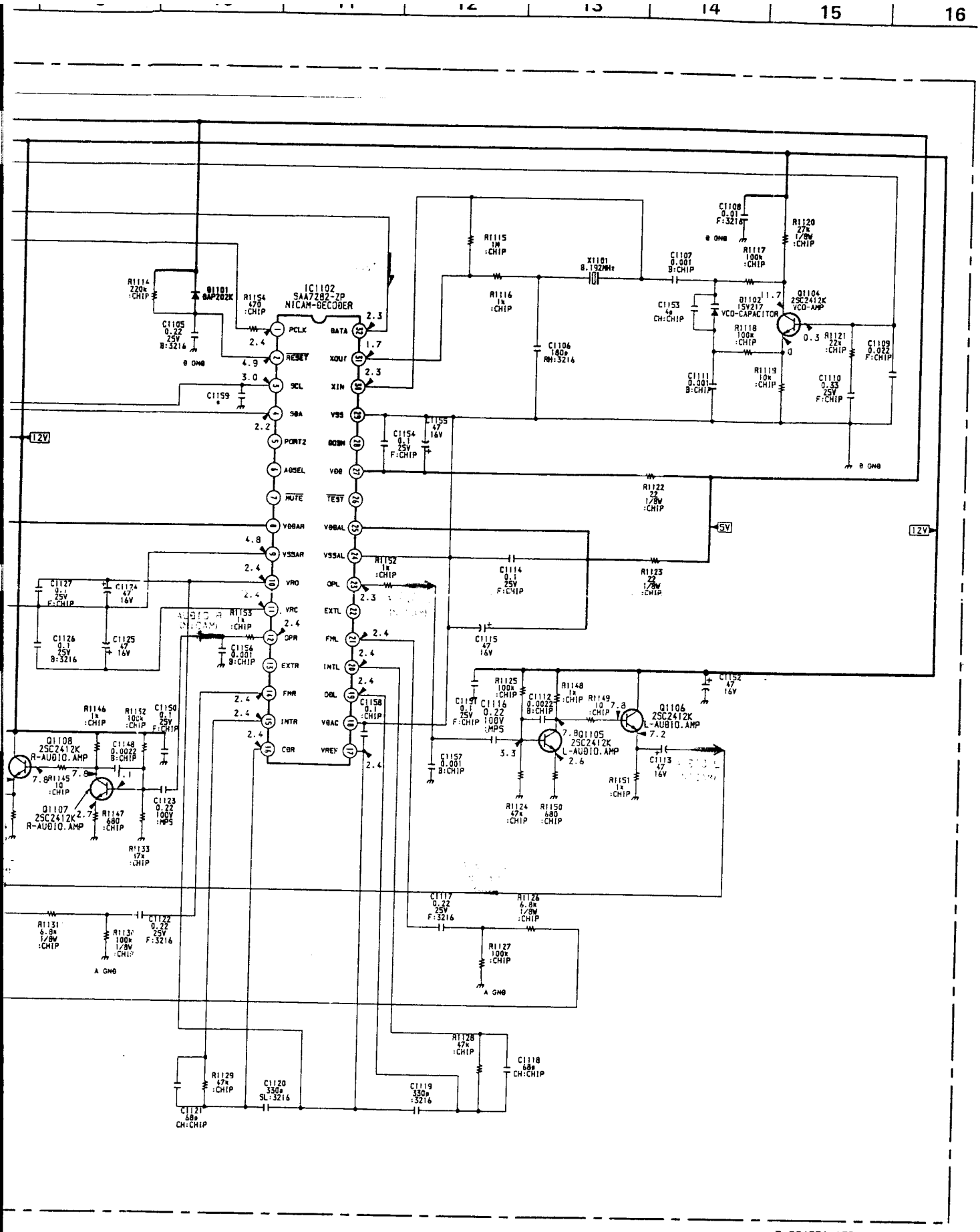

B-SS4536<AEP>-A1.

F

G

H

I

J

K

L

M

N

O

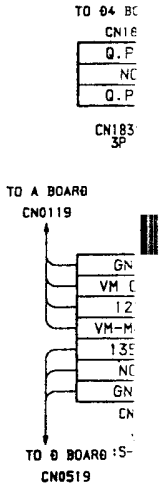
TO 04 BC
CN16
Q.P
NC
Q.P
CN183
3P
TO A BOARD
CN0119
GN
VM (
12
VM-M
13
NC
GN
CN
TO 0 BOARD :S-
CN0519

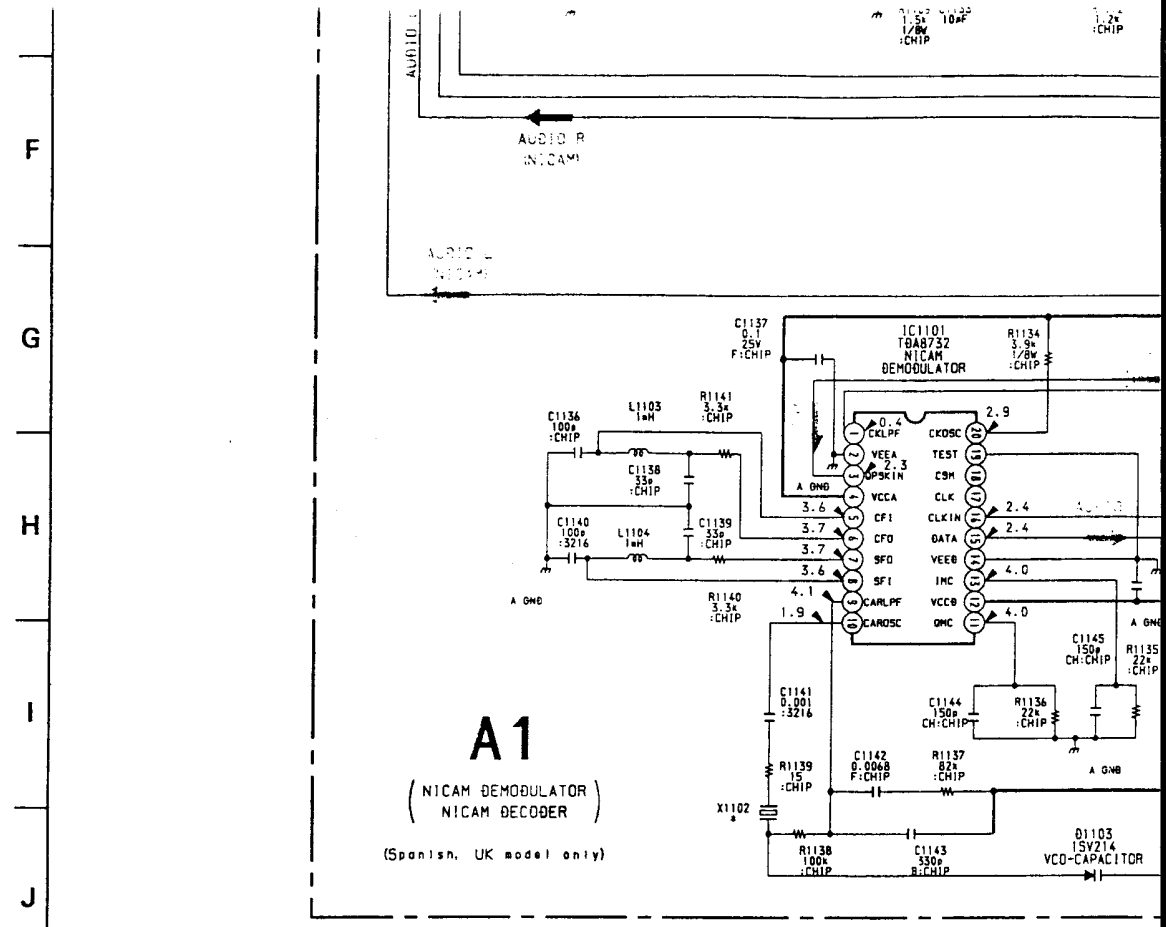
AUDIO R
(NICAM)
IC1101
TDA8732
NICAM
DEMODULATOR
CKLPF
VEEA
OPSKIN
VCCA
CFI
CFO
SFO
SFI
CARLPF
CAROSC
CKOSC
TEST
CSM
CLK
CLKIN
DATA
VEEB
INC
VCCB
OMC
A GND
A1
(NICAM DEMODULATOR
NICAM DECODER)
(Spanish, UK model only)
D1103
1SV214
VCO-CAPACITOR

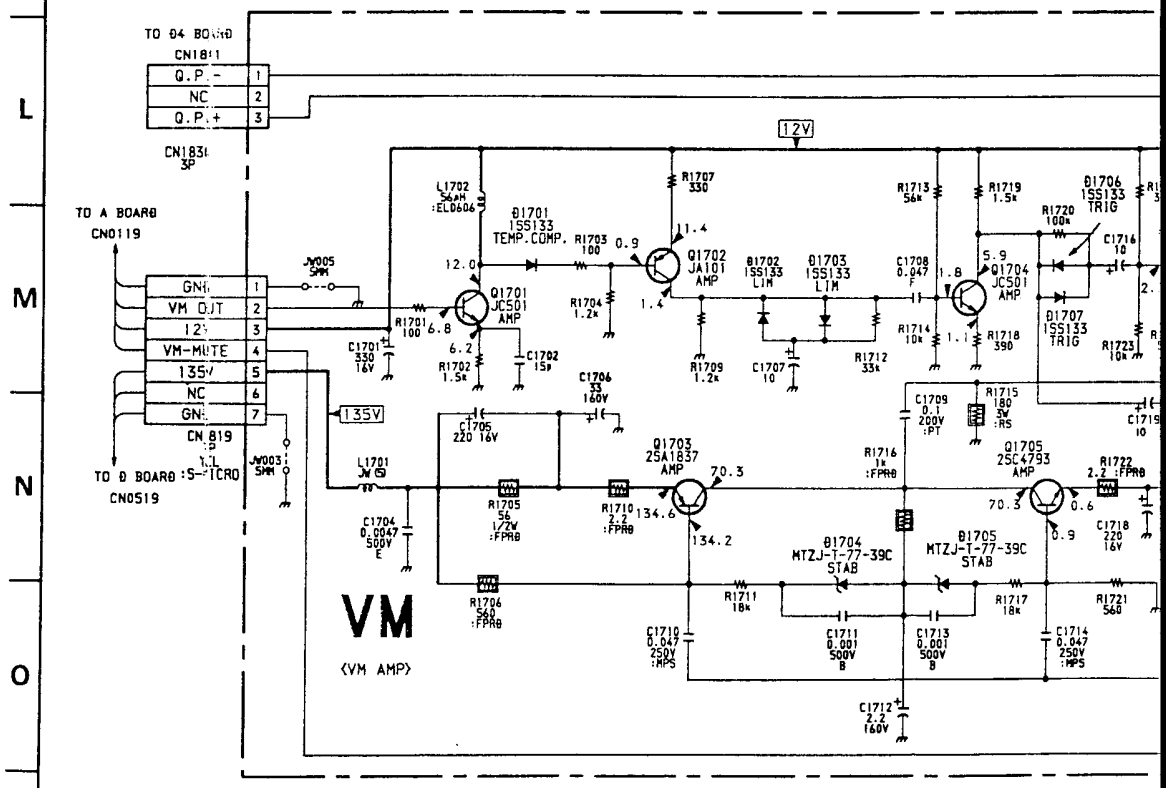
TO D4 BOARD
CN1811
Q.P.-
NC
Q.P.+
CN1831
3P
TO A BOARD
CN0119
GND
VM OUT
12V
VM-MUTE
135V
NC
GND
CN819
TO D BOARD
CN0519
12V
135V
D1701
1SS133
TEMP.COMP.
Q1701
JC501
AMP
Q1702
JA101
AMP
D1702
1SS133
LIM
D1703
1SS133
LIM
Q1704
JC501
AMP
D1706
1SS133
TRIG
D1707
1SS133
TRIG
Q1703
2SA1837
AMP
Q1705
2SC4793
AMP
D1704
MTZJ-T-77-39C
STAB
D1705
MTZJ-T-77-39C
STAB
VM
(VM AMP)

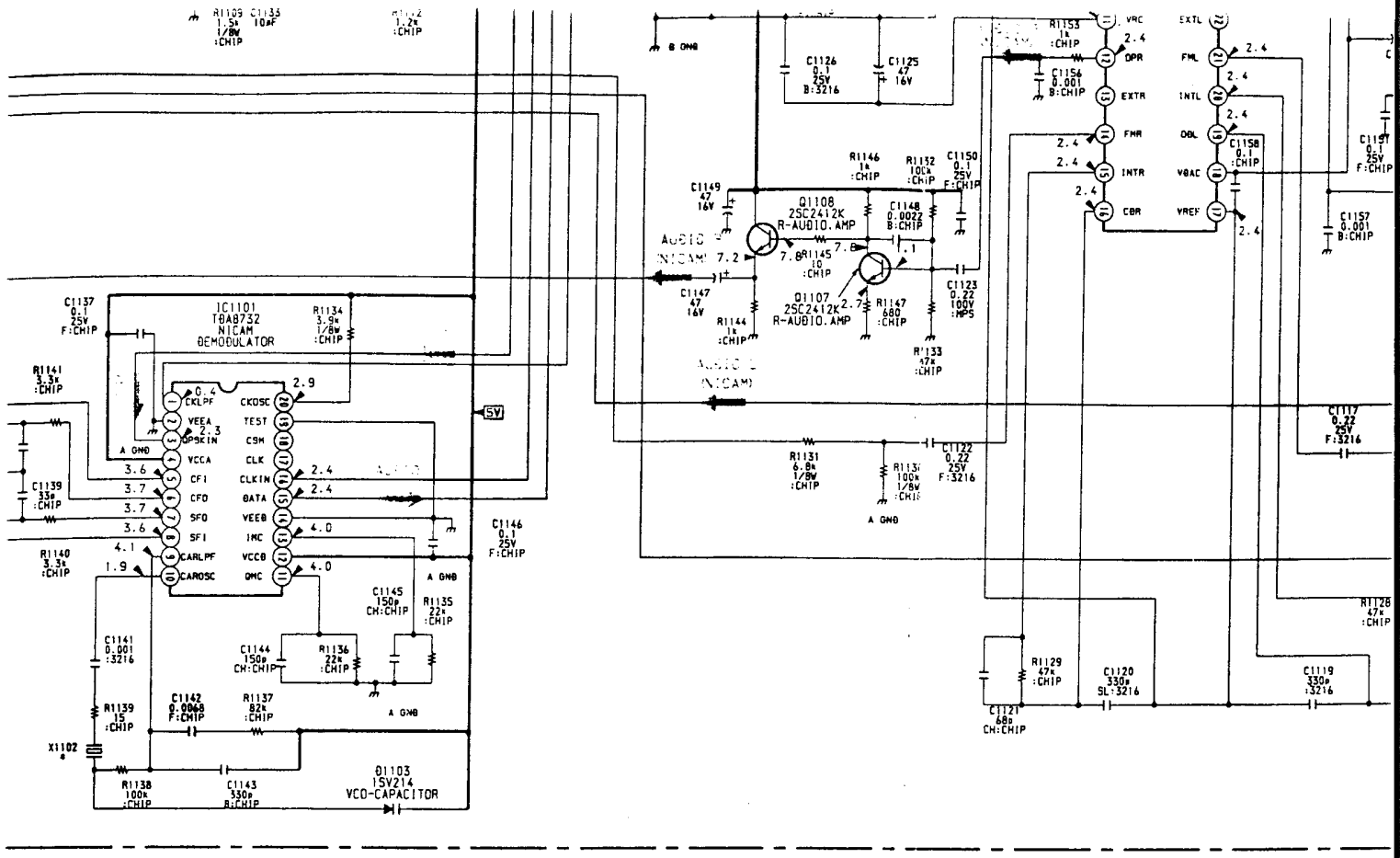

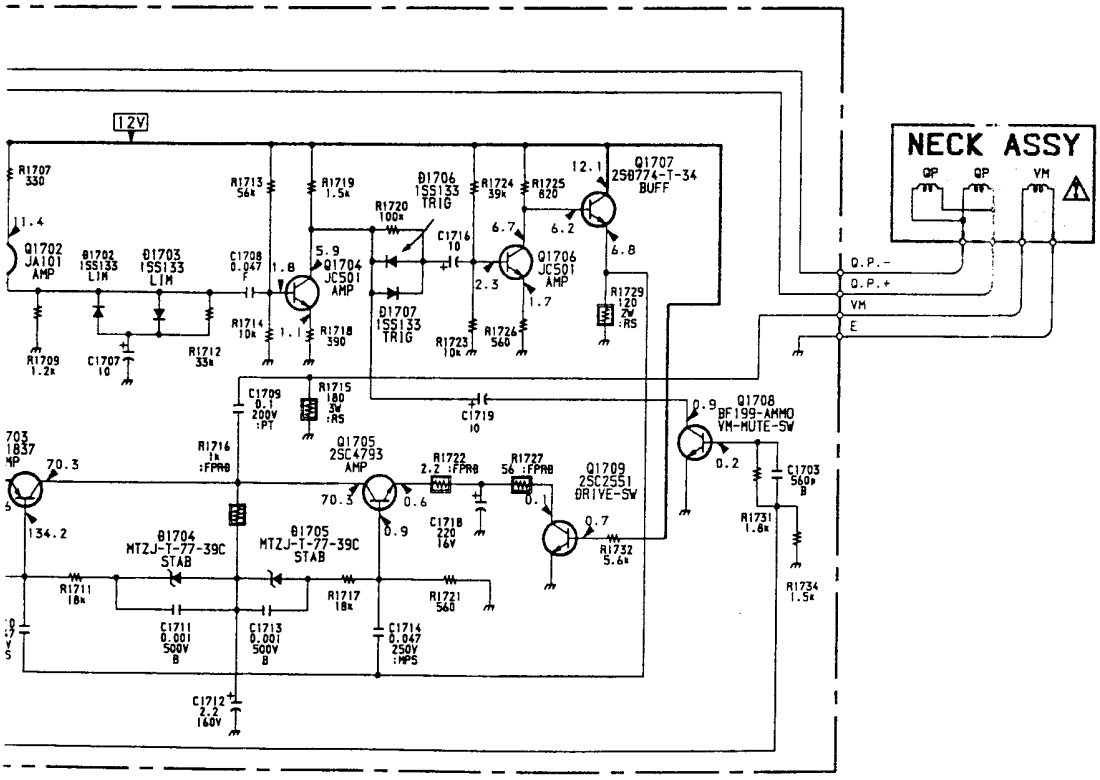

B-SS4536<AEP>-VM.

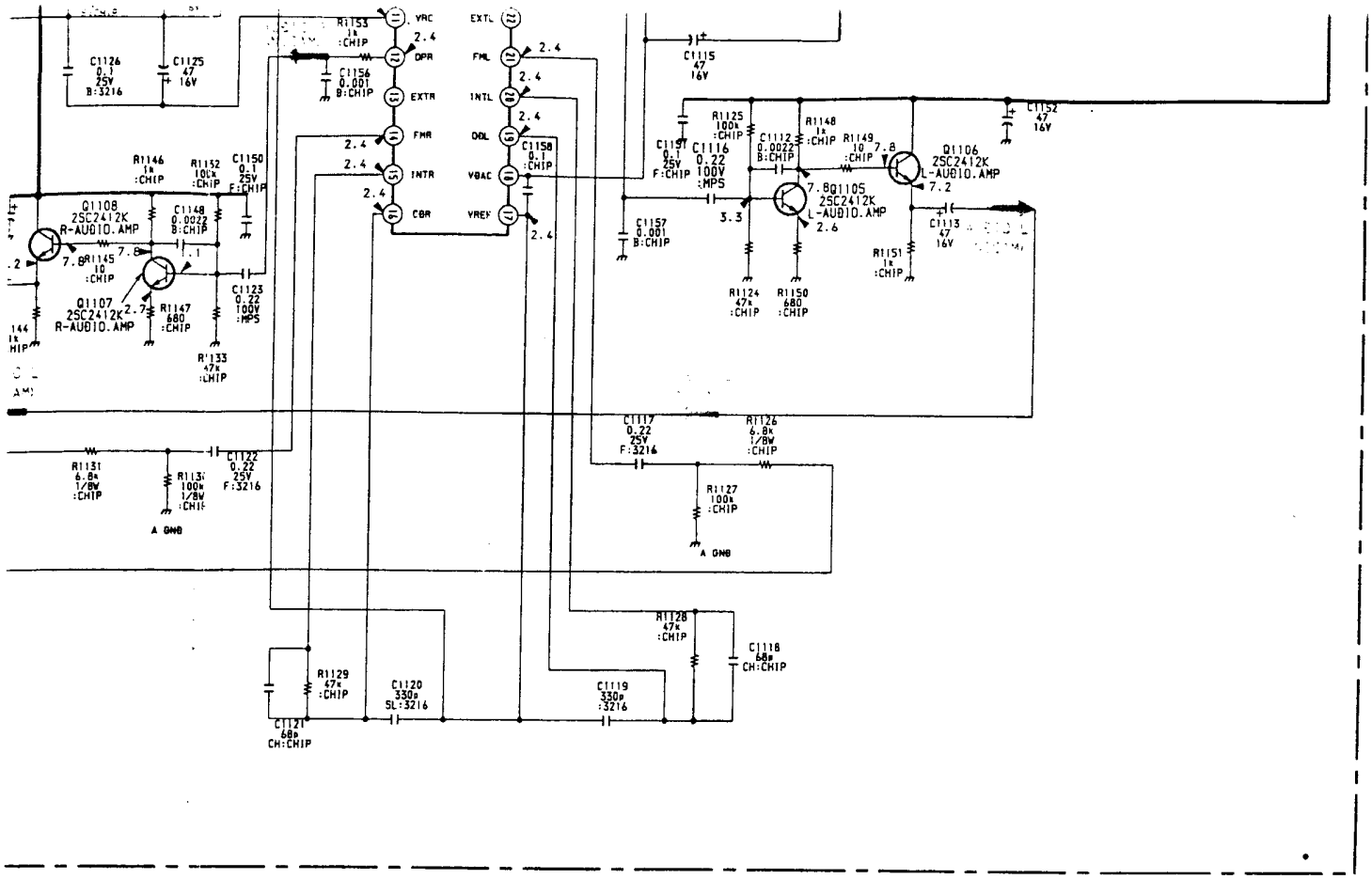

B-SS4536<AEP>-A1.

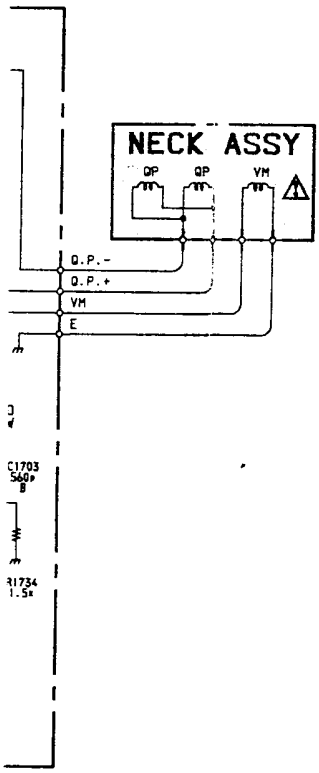

A1 BOARD * MARK

Model	KV-X2973E	KV-X2972U
BP1101	5.850MHz	6.552MHz
C1159	-	47P
CF1101	-	6.0MHz
CF1102	5.5MHz	-
JR1101	0 : CHIP	-
L1105	-	15MMh
X1102	11.700MHz	13.104MHz

• A1 BOARD IC1101 TDA8732

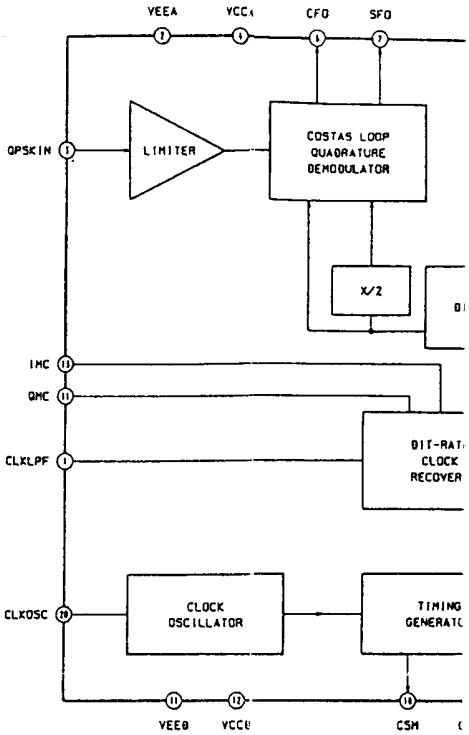

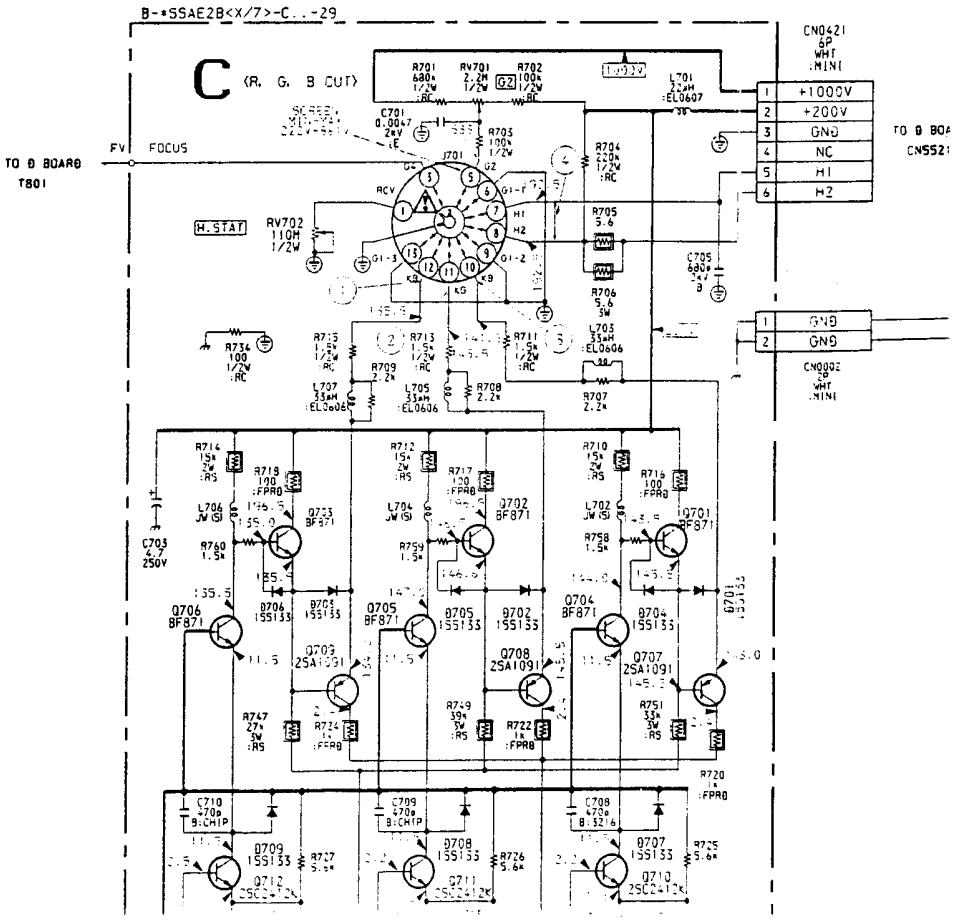

ARD * MARK

del	KV-X2973E	KV-X2972U
	5.850MHz	6.552MHz
	-	47P
	-	6.0MHz
2	5.5MHz	-
	0 : CHIP	-
	-	15MMh
	11.700MHz	13.104MHz

• A1 BOARD IC1101 TDA8732

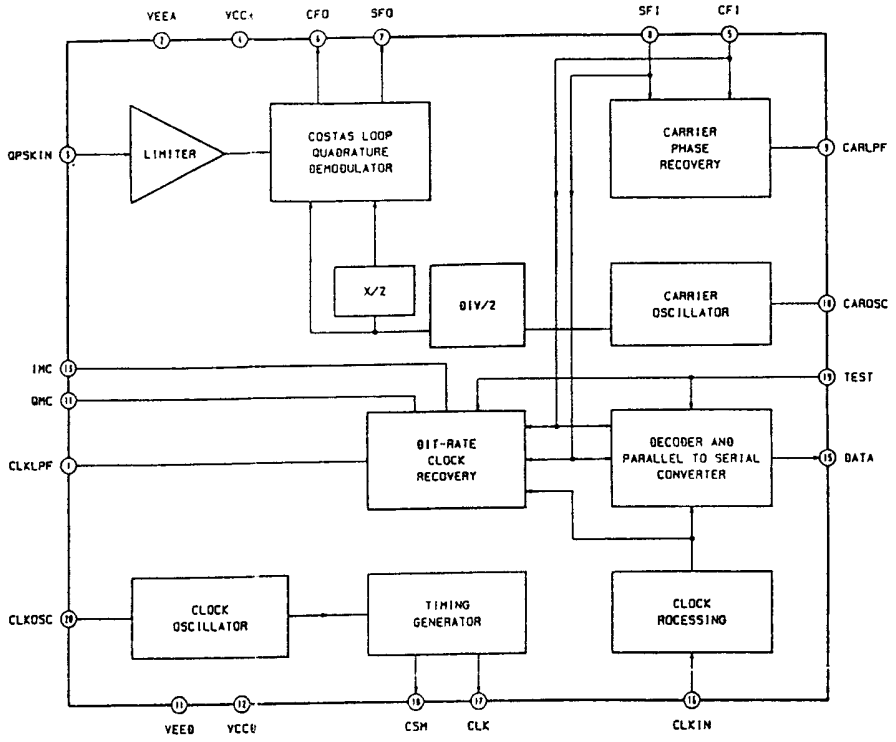

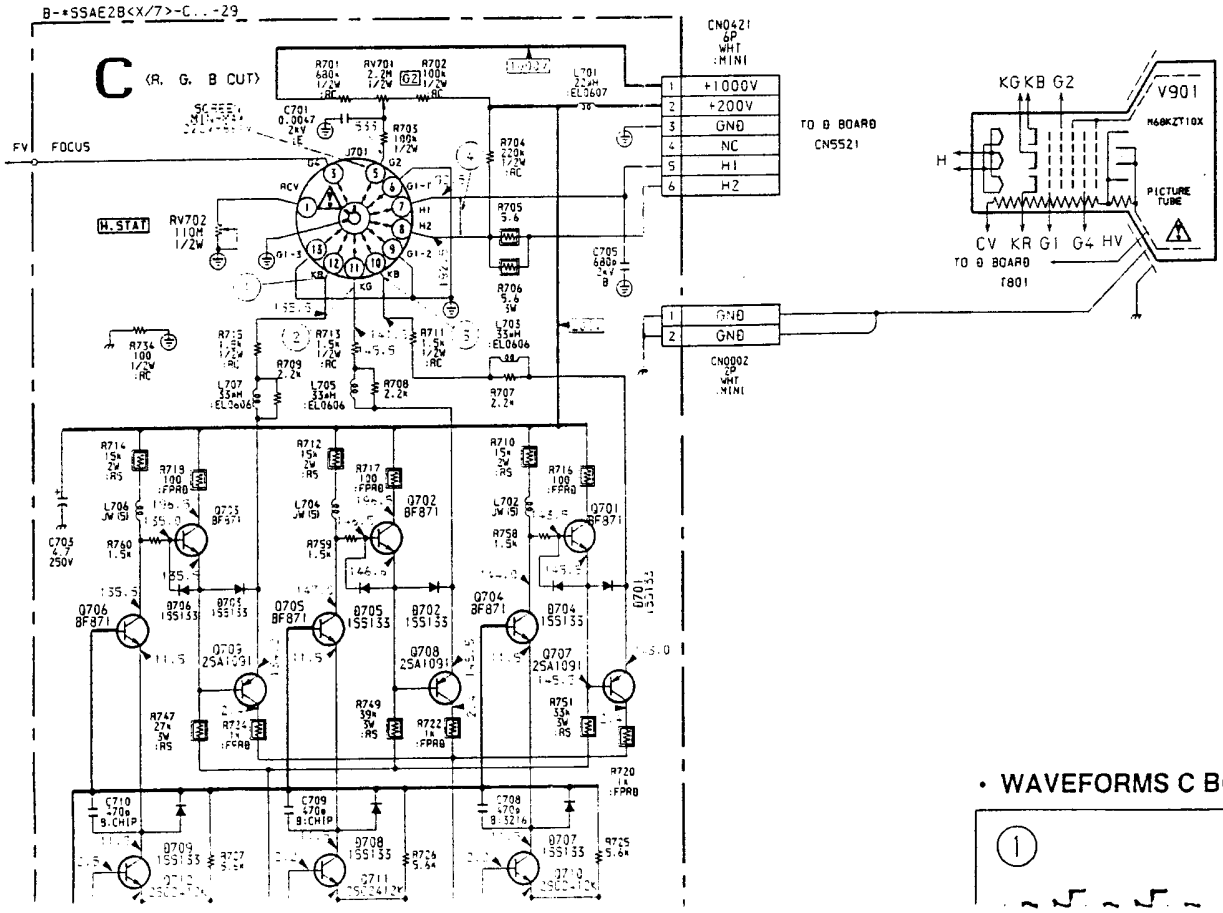

• WAV

CN1823 10P BLK :B10B-S

VP-OUT+
VP-OUT+
VP-OUT-
VP-OUT-
FBT 12V
FBT -15
H-DRIV
H-TPRZ
E
+135V

TO B BOARD CN0523

• WAVEFORMS C BOARD

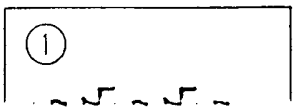

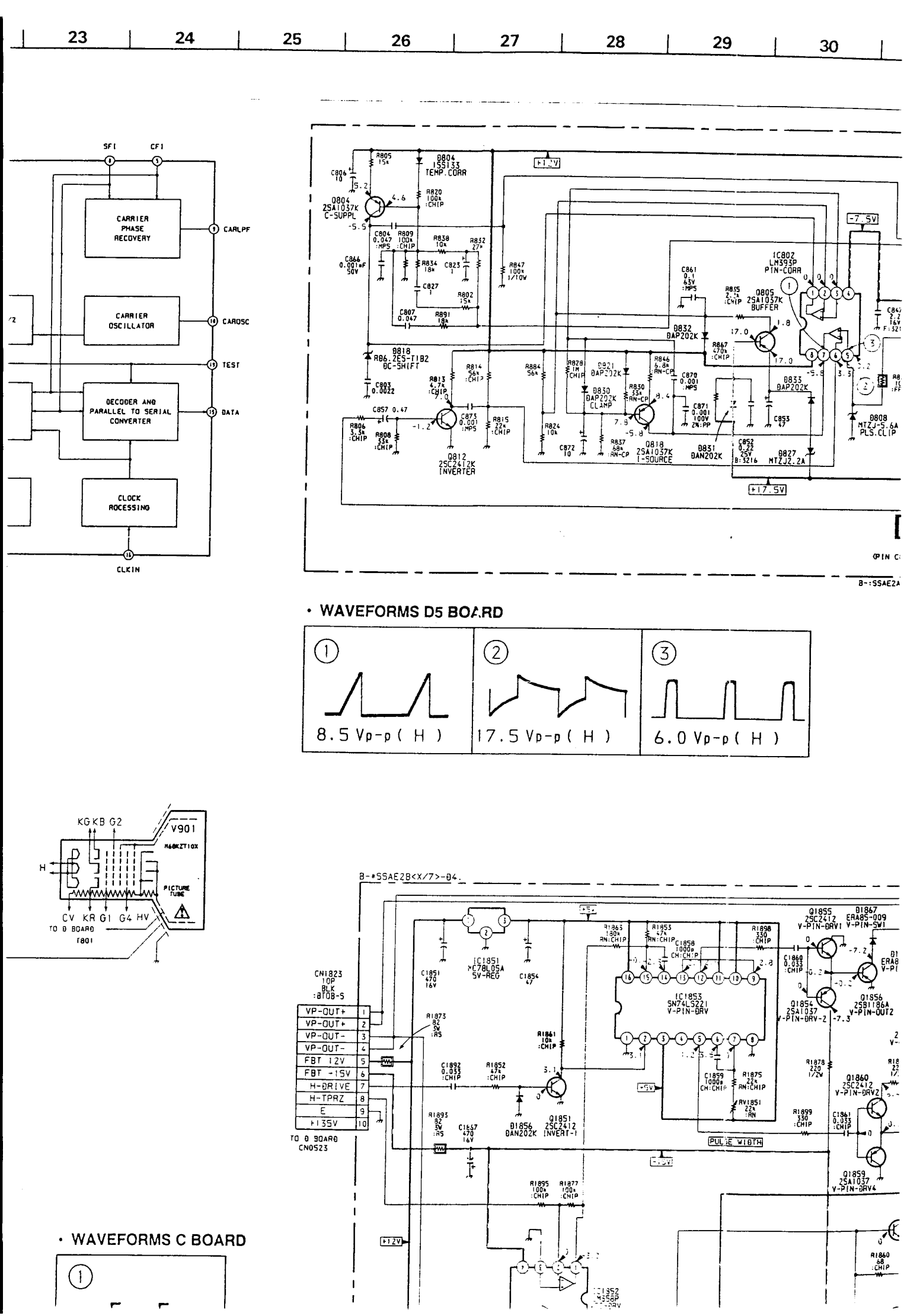

• WAVEFORMS D5 BOARD

①	②	③
8.5 Vp-p (H)	17.5 Vp-p (H)	6.0 Vp-p (H)

• WAVEFORMS C BOARD

①

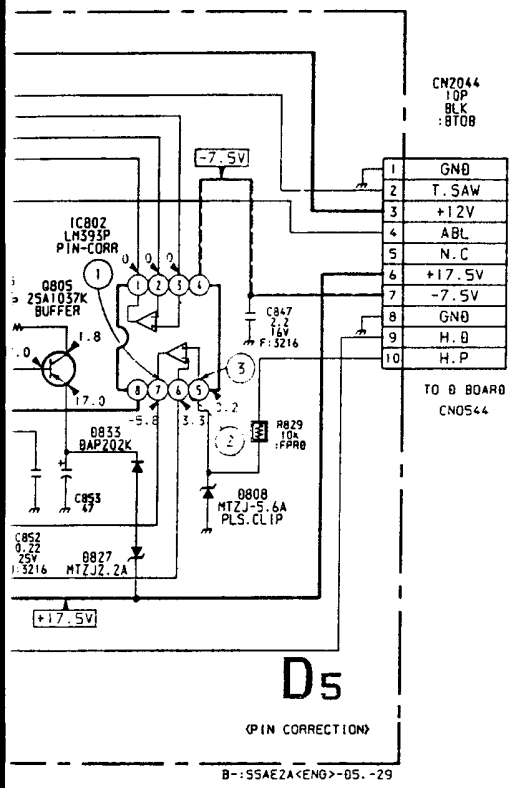
CN2044
10P
BLK
:8T08
GND
T.SAW
+12V
ABL
N.C
+17.5V
-7.5V
GND
H.D
H.P
TO D BOARD
CN0544
-7.5V
IC802
LM393P
PIN-CORR
Q805
2SA1037K
BUFFER
C847
2.2
16V
F:3216
R829
10A
:FPR0
D833
BAP202K
C853
47
D808
MTZJ-5.6A
PLS.CLIP
C852
0.22
25V
F:3216
D827
MTZJ2.2A
+17.5V
D5
(PIN CORRECTION)
B-:SSAE2A<ENG>-05.-29

(H)

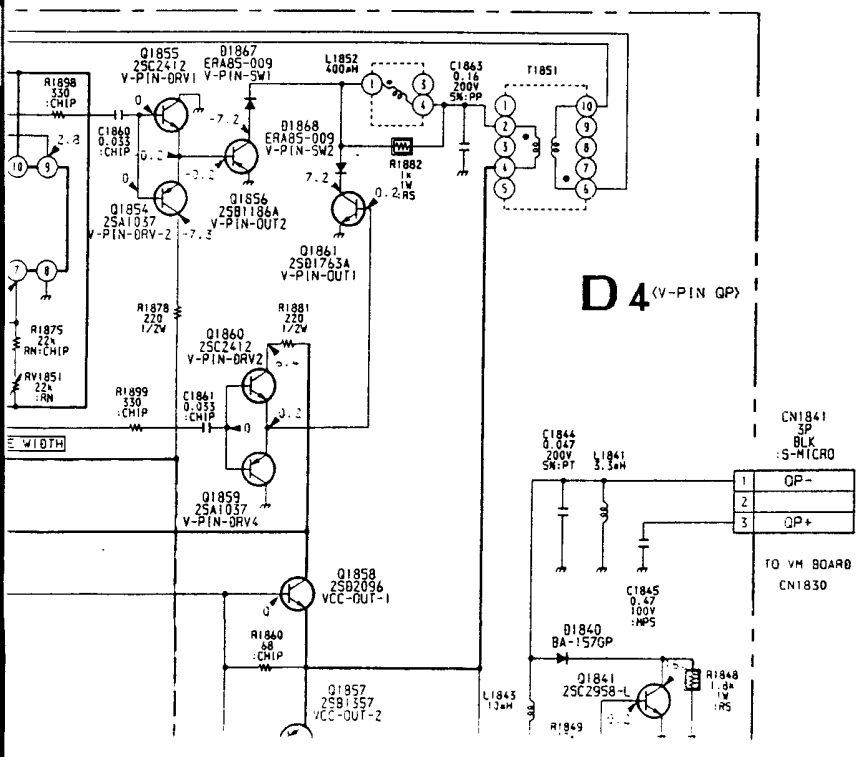
Q1855
2SC2412
V-PIN-DRV1
D1867
ERA85-009
V-PIN-SW1
L1852
400uH
C1863
0.16
200V
5%:PP
T1851
R1898
330
:CHIP
C1860
0.033
:CHIP
D1868
ERA85-009
V-PIN-SW2
R1882
1W
Q1854
2SA1037
V-PIN-DRV-2
Q1856
2SB1186A
V-PIN-OUT2
Q1861
2SB1763A
V-PIN-OUT1
D4 (V-PIN QP)
R1878
220
1/2W
R1881
220
1/2W
R1875
22k
RN:CHIP
RV1851
22k
:RN
Q1860
2SC2412
V-PIN-DRV2
R1899
330
:CHIP
C1861
0.033
:CHIP
Q1859
2SA1037
V-PIN-DRV4
E WIDTH
CN1841
3P
BLK
:S-MICRO
C1844
0.047
200V
5%:PT
L1841
3.3uH
QP-
QP+
TO VM BOARD
CN1830
C1845
0.47
100V
:MPS
Q1858
2SB2096
VCC-OUT-1
D1840
BA-157GP
R1840
68
:CHIP
Q1841
2SC2958-L
R1848
1.8k
1W
:RS
Q1857
2SB1357
VCC-OUT-2
L1843
10uH
R1849

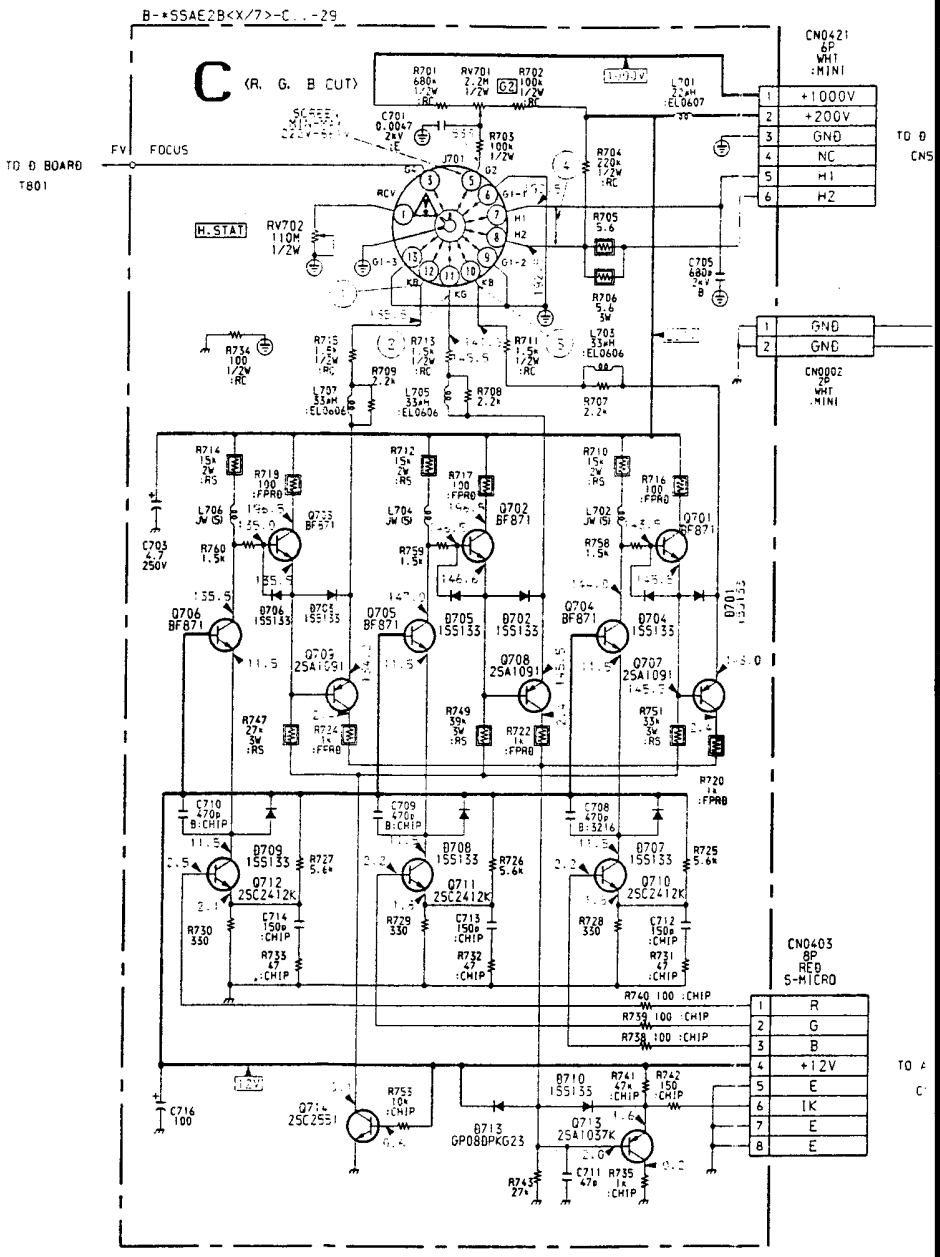
B-*SSAE2B<X/7>-C..-29
C (R, G, B CUT)
TO B BOARD
T801
FV
FOCUS
H.STAT
RV702 110M 1/2W
CN0421 6P WHT :MINI
+1000V
+200V
GND
NC
H1
H2
CN0002 2P WHT :MINI
GND
GND
CN0403 8P RED S-MICRO
R
G
B
+12V
E
IK
E
E
Q706 BF871
Q705 BF871
Q704 BF871
Q701 BF871
Q702 BF871
Q703 2SA1091
Q708 2SA1091
Q707 2SA1091
Q712 2SC2412K
Q711 2SC2412K
Q710 2SC2412K
Q714 2SC2551
Q713 2SA1037K
D713 GP08DPKG23
C703 4.7 250V
C716 100

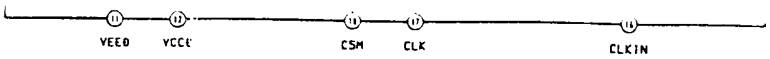

• WAVEFORMS D5 BOARD

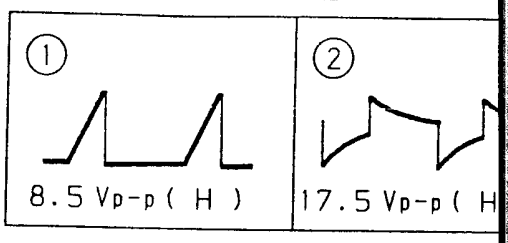

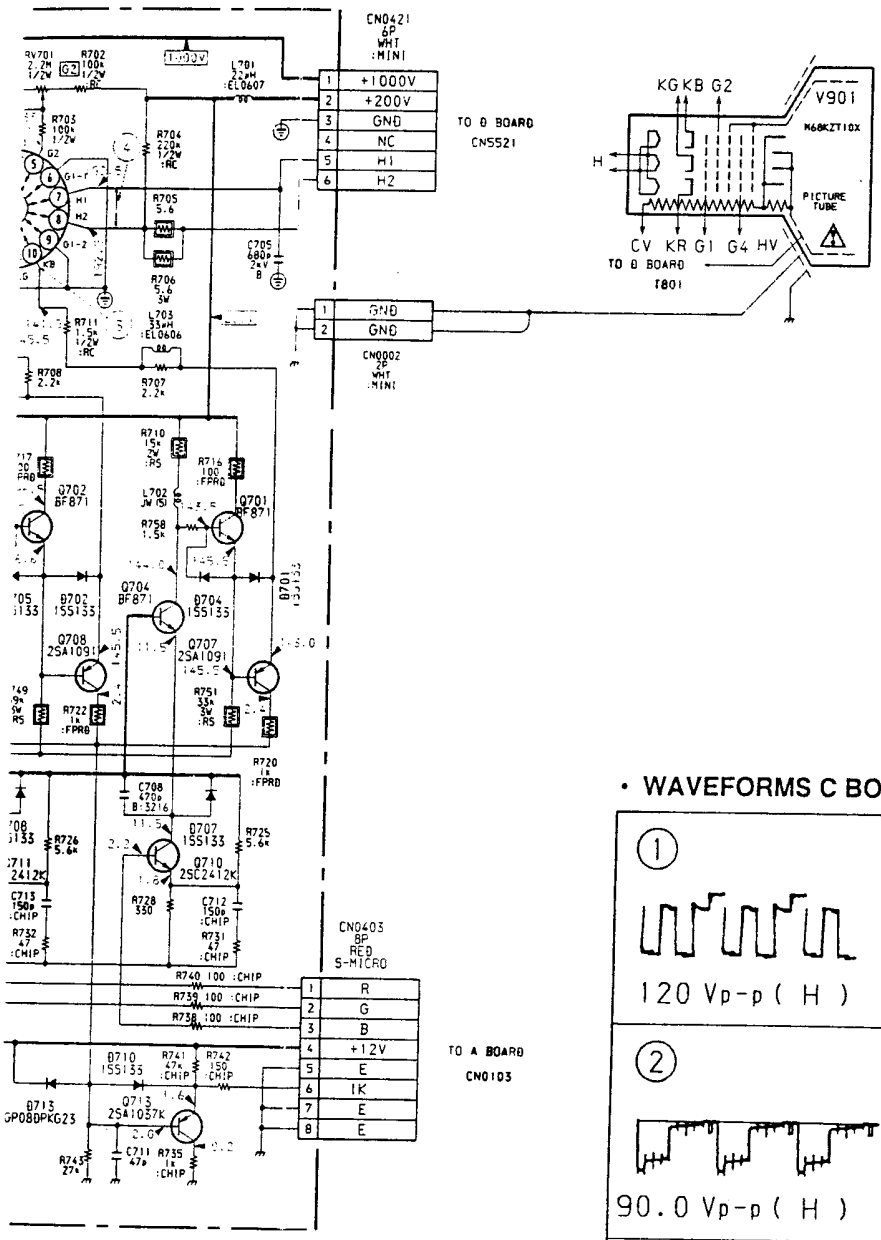

• WAVEFORMS C BOARD

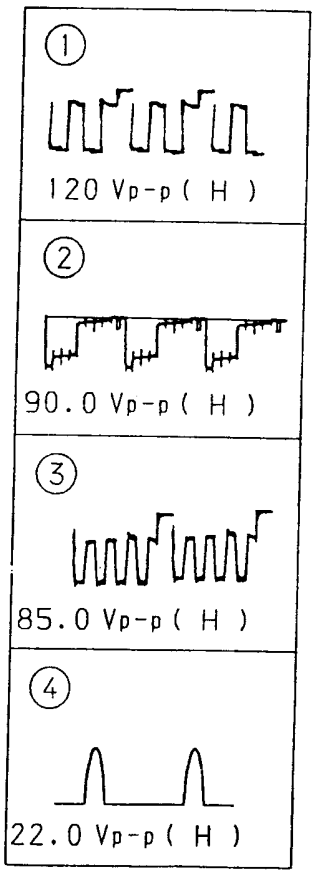

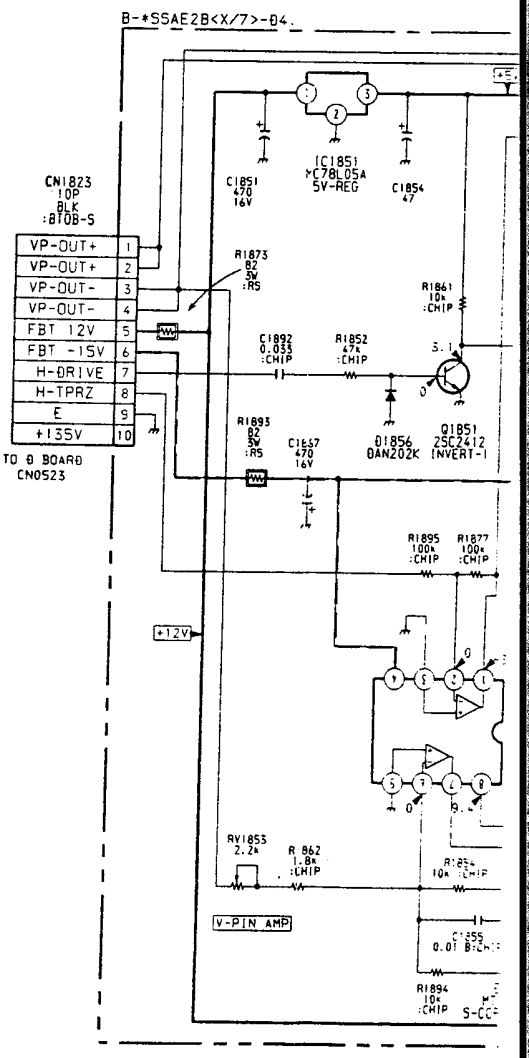

• WAVEFORMS D5 BOARD

①	②	③
8.5 Vp-p (H)	17.5 Vp-p (H)	6.0 Vp-p (H)

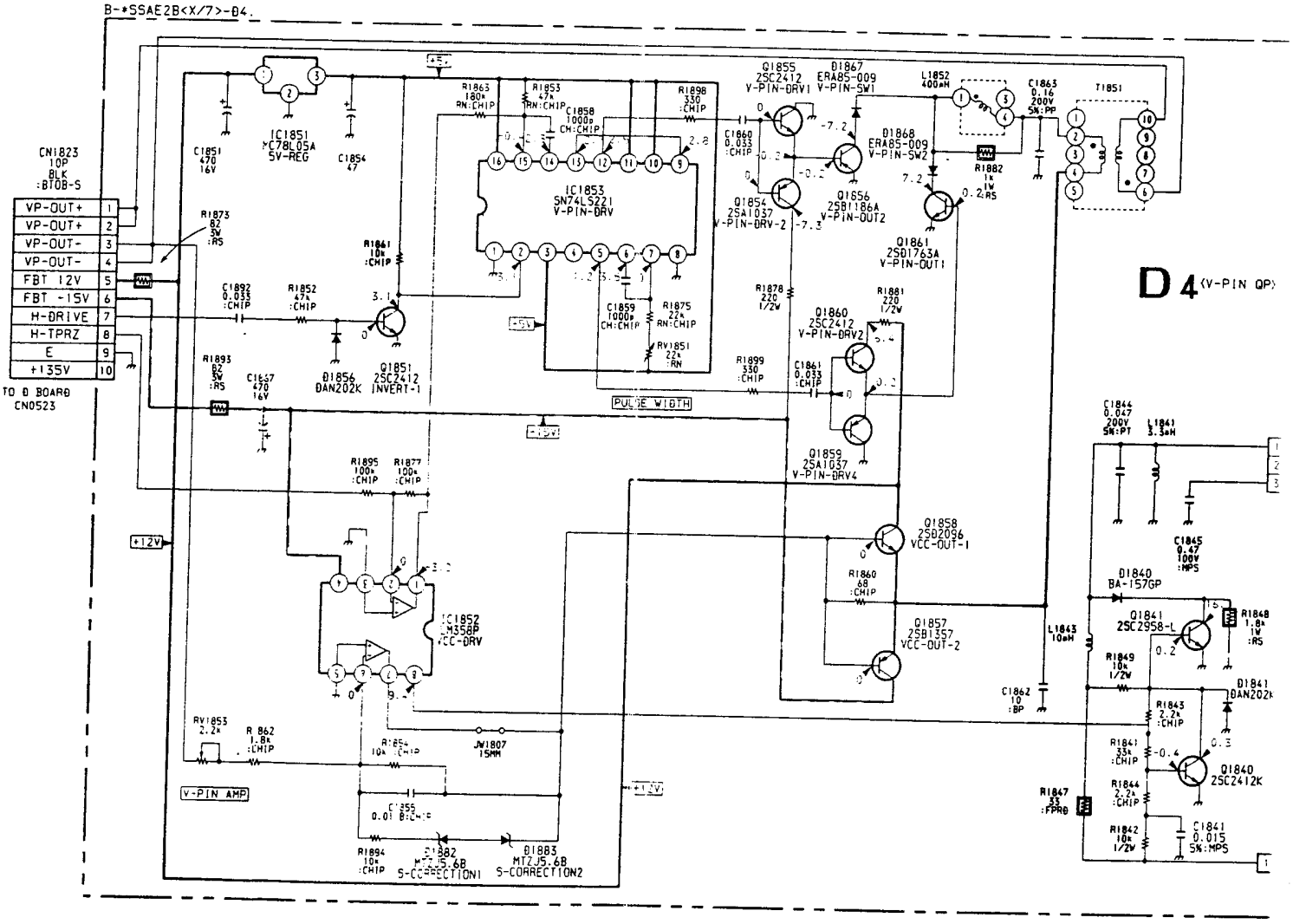

H)

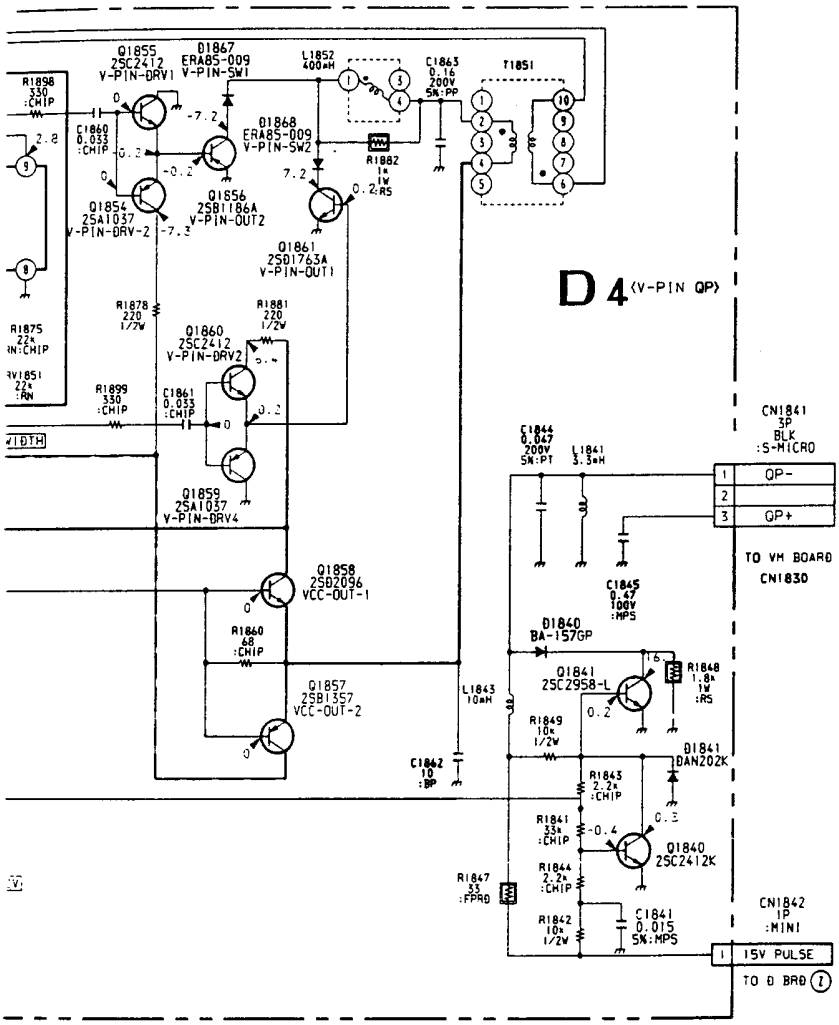
D 4 (V-PIN QP)
Q1855 2SC2412 V-PIN-DRV1
D1867 ERA85-009 V-PIN-SW1
L1852 400mH
C1863 0.16 200V 5%:PP
T1851
R1898 330 :CHIP
C1860 0.033 :CHIP
D1868 ERA85-009 V-PIN-SW2
R1882 1k 1W :RS
Q1854 2SA1037 V-PIN-DRV-2
Q1856 2SB1186A V-PIN-OUT2
Q1861 2SD1763A V-PIN-OUT1
R1878 220 1/2W
R1881 220 1/2W
Q1860 2SC2412 V-PIN-DRV2
R1899 330 :CHIP
C1861 0.033 :CHIP
Q1859 2SA1037 V-PIN-DRV4
Q1858 2SD2096 VCC-OUT-1
R1860 68 :CHIP
Q1857 2SB1357 VCC-OUT-2
C1844 0.047 200V 5%:PT
L1841 3.3mH
CN1841 3P BLK :S-MICRO
QP-
QP+
TO VH BOARD CN1830
C1845 0.47 100V :MPS
D1840 BA-157GP
Q1841 2SC2958-L
R1848 1.8k 1W :RS
L1843 10mH
R1849 10k 1/2W
D1841 DAN202K
C1842 10 :BP
R1843 2.2k :CHIP
R1841 33k :CHIP
Q1840 2SC2412K
R1844 2.2k :CHIP
R1847 33 :FPRD
R1842 10k 1/2W
C1841 0.015 5%:MPS
CN1842 1P :MINI
15V PULSE
TO D BRD 7

A1 [NICAM DECODER, NICAM DEMODULATOR] C [R.G.B OUT] D5 [PIN CORRECTION] VM [VM AMP] D4 [V - PIN Q P]

A B C D E F G H I J

- A1 BOARD - (Spanish, UK Model only)

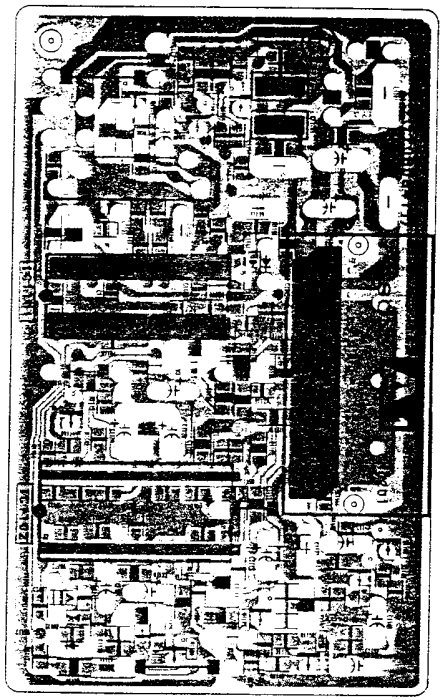

- C BOARD -

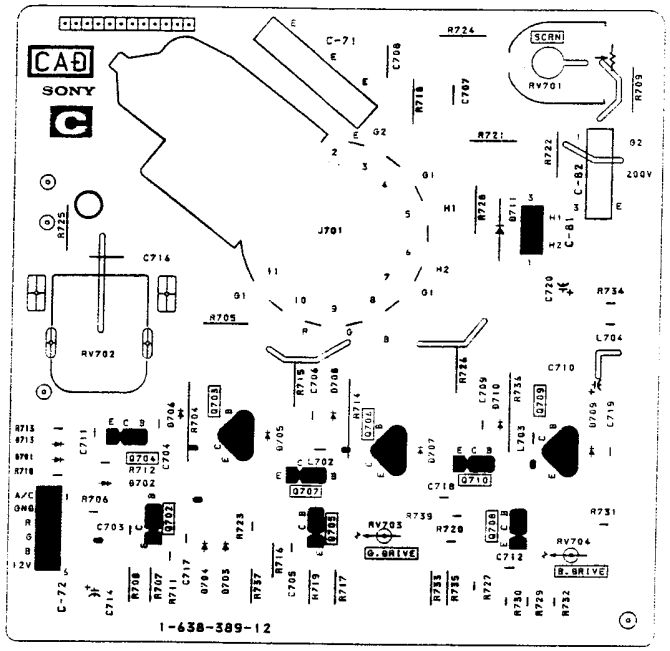

Note :

- : Pattern from the side which enables seeing.
- : Pattern of the rear side.

– D5 BOARD –

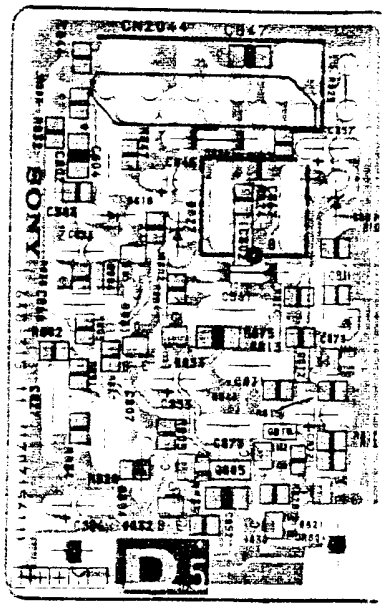

Note :

- : Pattern from the side which en
- : Pattern of the rear side.

– VM BOARD –

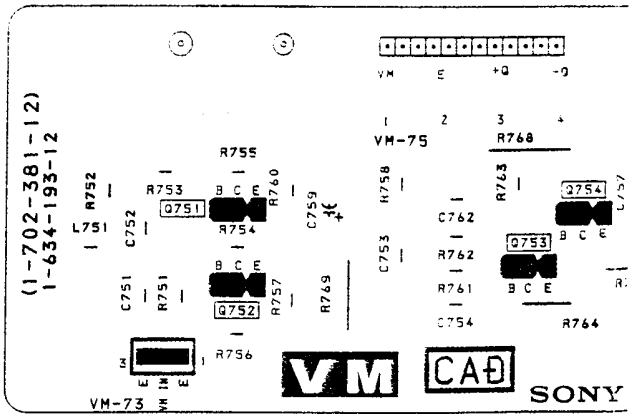

– D5 BOARD –

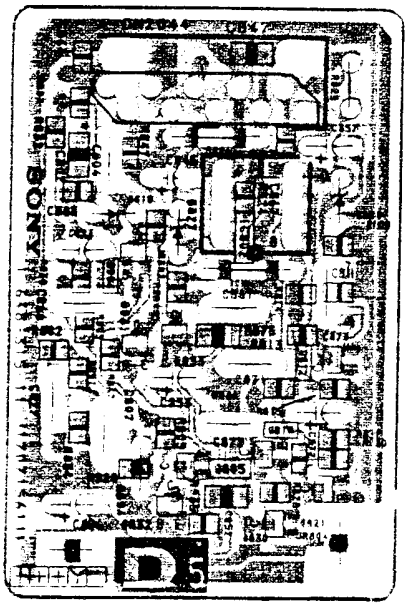

Note :

- : Pattern from the side which enables seeing.
- : Pattern of the rear side.

– VM BOARD –

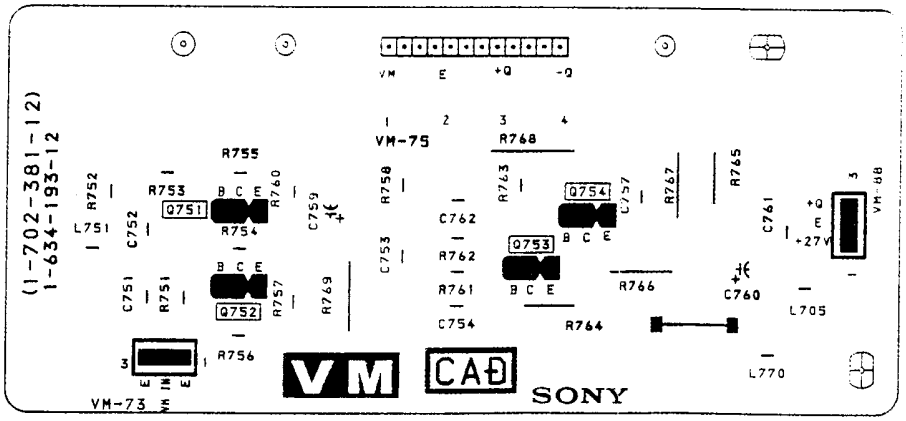

– D4 BOARD –

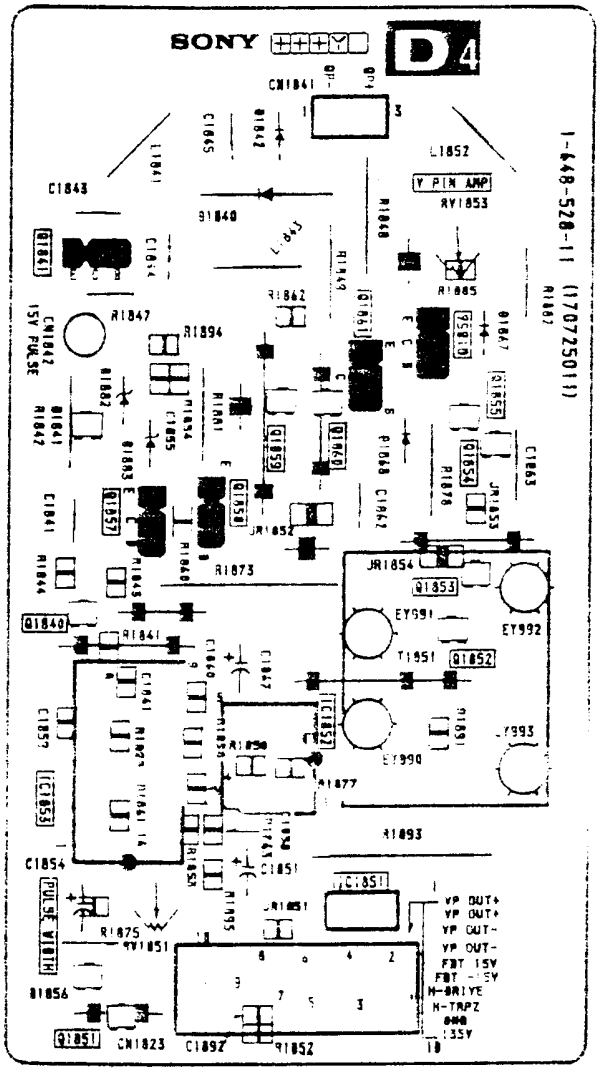
SONY
D4
1-648-528-11 (1707250 11)
CN1841
L1852
Y PIN AMP
RV1853
C1843
Q1840
Q1841
Q1842
Q1843
Q1844
Q1845
Q1846
Q1847
Q1848
Q1849
Q1850
Q1851
Q1852
Q1853
Q1854
Q1855
Q1856
Q1857
Q1858
Q1859
Q1860
Q1861
R1847
R1894
R1885
R1873
R1893
R1875
RV1851
R1856
CN1842
15V PULSE
JR1854
JR1855
JR1852
JR1851
EY991
EY992
EY990
EY993
T1851
IC1851
IC1852
IC1853
C1854
C1897
CN1823
PULSE WIDTH
VP OUT+
VP OUT+
VP OUT-
VP OUT-
FBT 15V
FBT -15V
H-DRIVE
H-TRPZ
35V
R767
R765
C761
C760
L705
L770
VM-88
+27V

IFH389F (French Model)

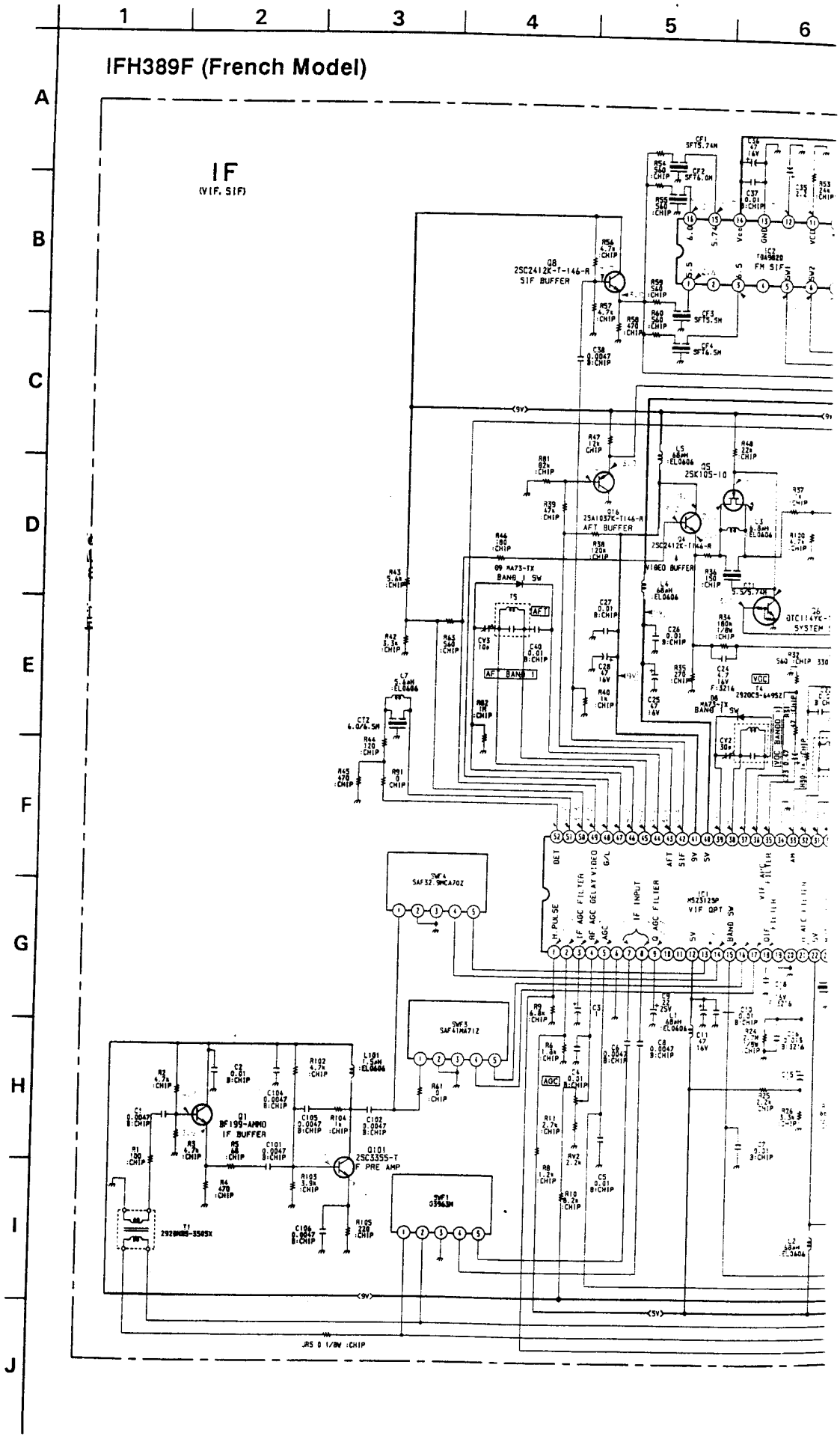

3 4 5 6 7 8 9 10

:h Model)

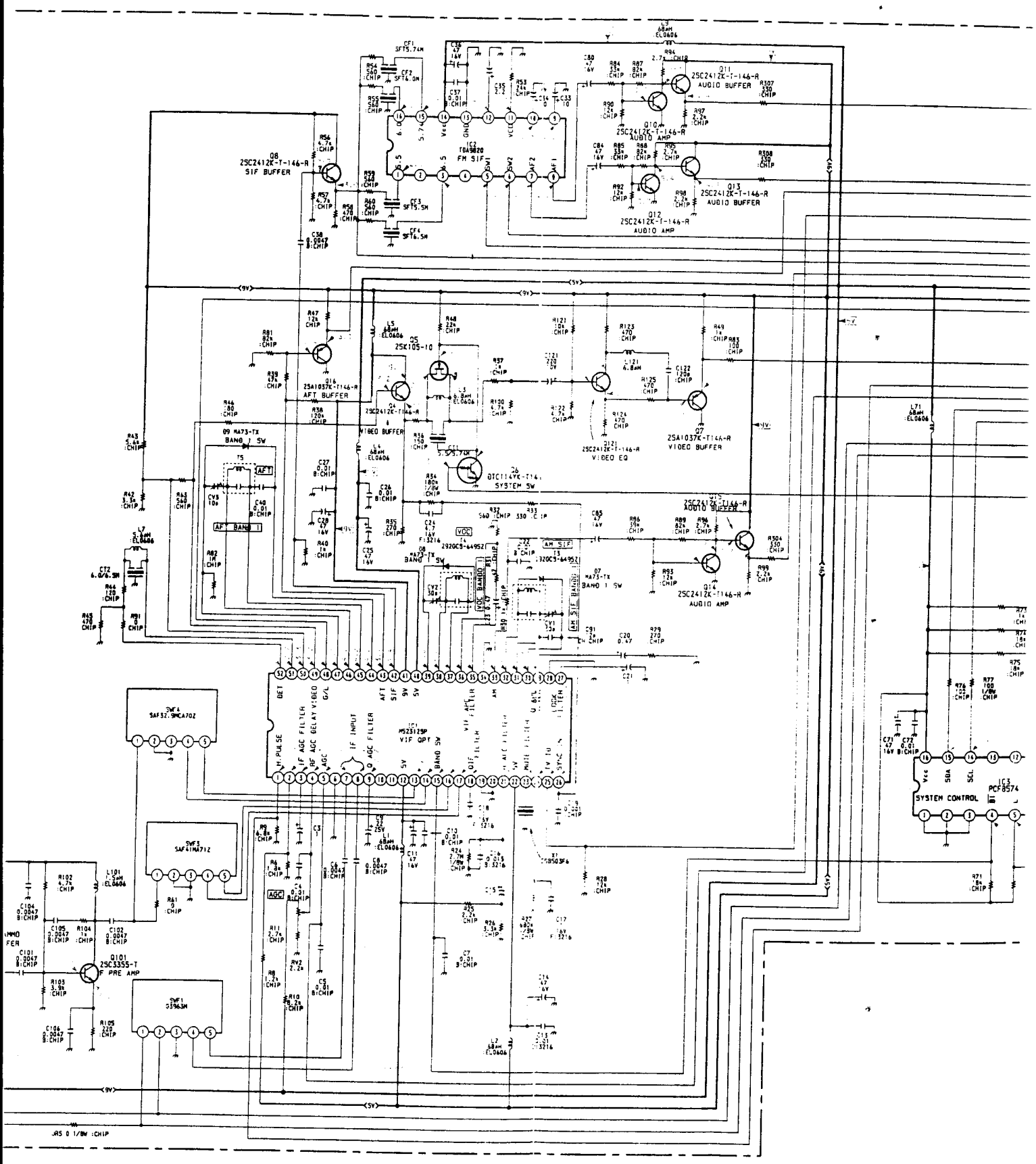

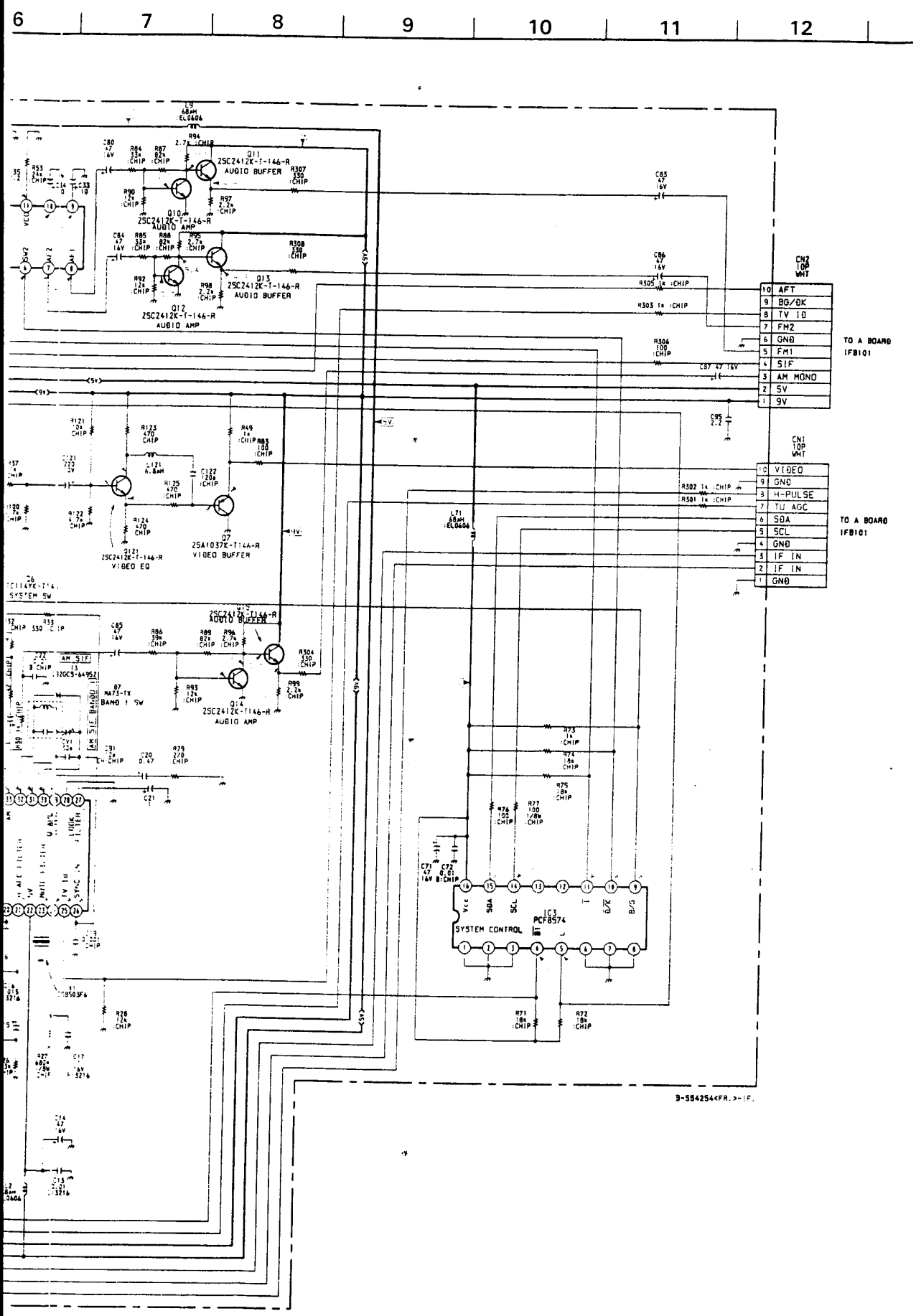
6
7
8
9
10
11
12
Q11
2SC2412K-T-146-R
AUDIO BUFFER
Q10
2SC2412K-T-146-R
AUDIO AMP
Q13
2SC2412K-T-146-R
AUDIO BUFFER
Q12
2SC2412K-T-146-R
AUDIO AMP
CN2
TOP
WHT
10 AFT
9 BG/OK
8 TV 10
7 FM2
6 GND
5 FM1
4 SIF
3 AM MONO
2 5V
1 9V
TO A BOARD
IFB101
Q121
2SC2412K-T-146-R
VIDEO EQ
Q7
2SA1037K-T-14A-R
VIDEO BUFFER
CN1
TOP
WHT
10 VIDEO
9 GND
8 H-PULSE
7 TU AGC
6 SDA
5 SCL
4 GND
3 IF IN
2 IF IN
1 GND
TO A BOARD
IFB101
SYSTEM SW
Q15
2SC2412K-T-146-R
AUDIO BUFFER
Q14
2SC2412K-T-146-R
AUDIO AMP
BAND I SW
IC3
PCF8574
SYSTEM CONTROL
Vcc
SDA
SCL
B/G
3-554254(FR.)-IF.

• IF BOARD IC3 PC8574 (French Model)

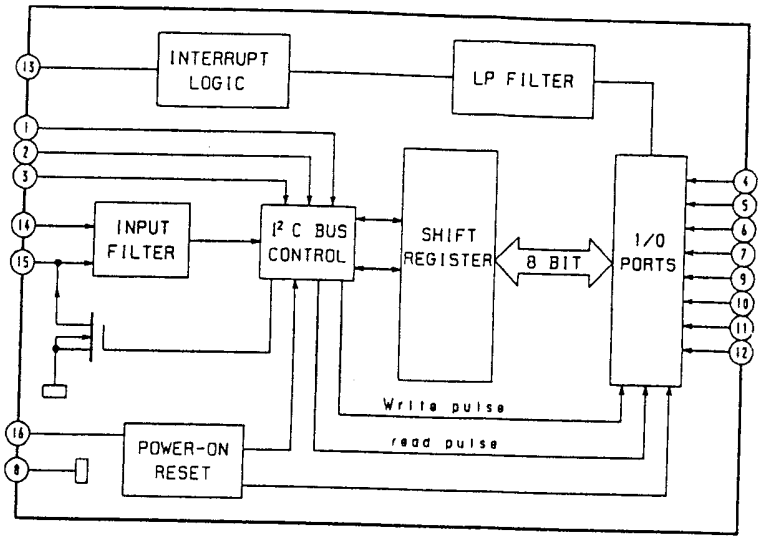

IF [VIF, SIF]

– IF BOARD – (French Model)

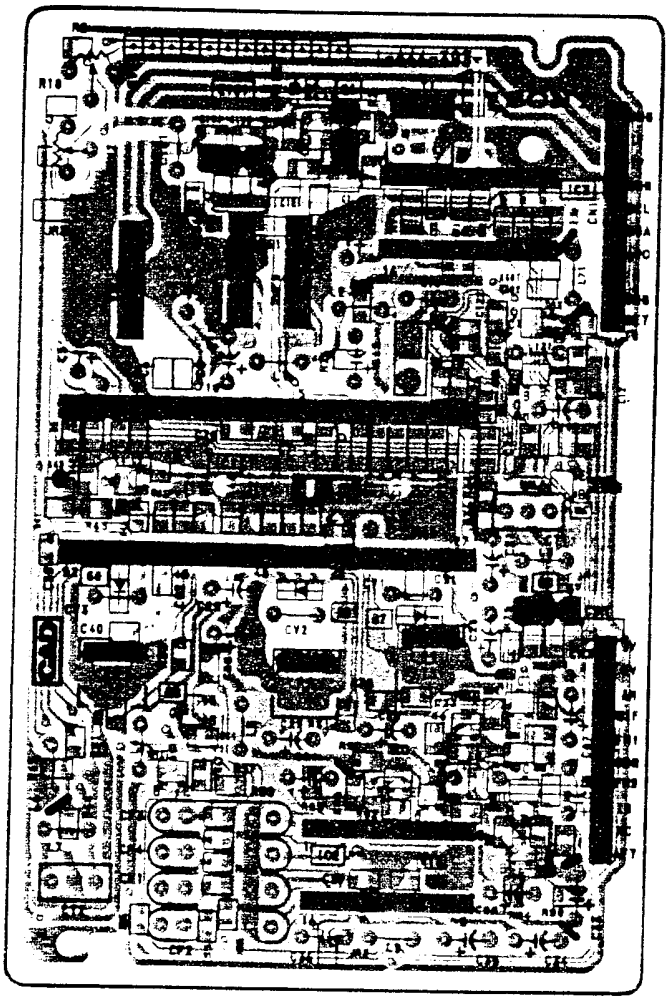

Note :

- [illegible] side which [illegible]
- : Pattern of the rear side.

IFH389 (AEP, Italian, Spanish Model)

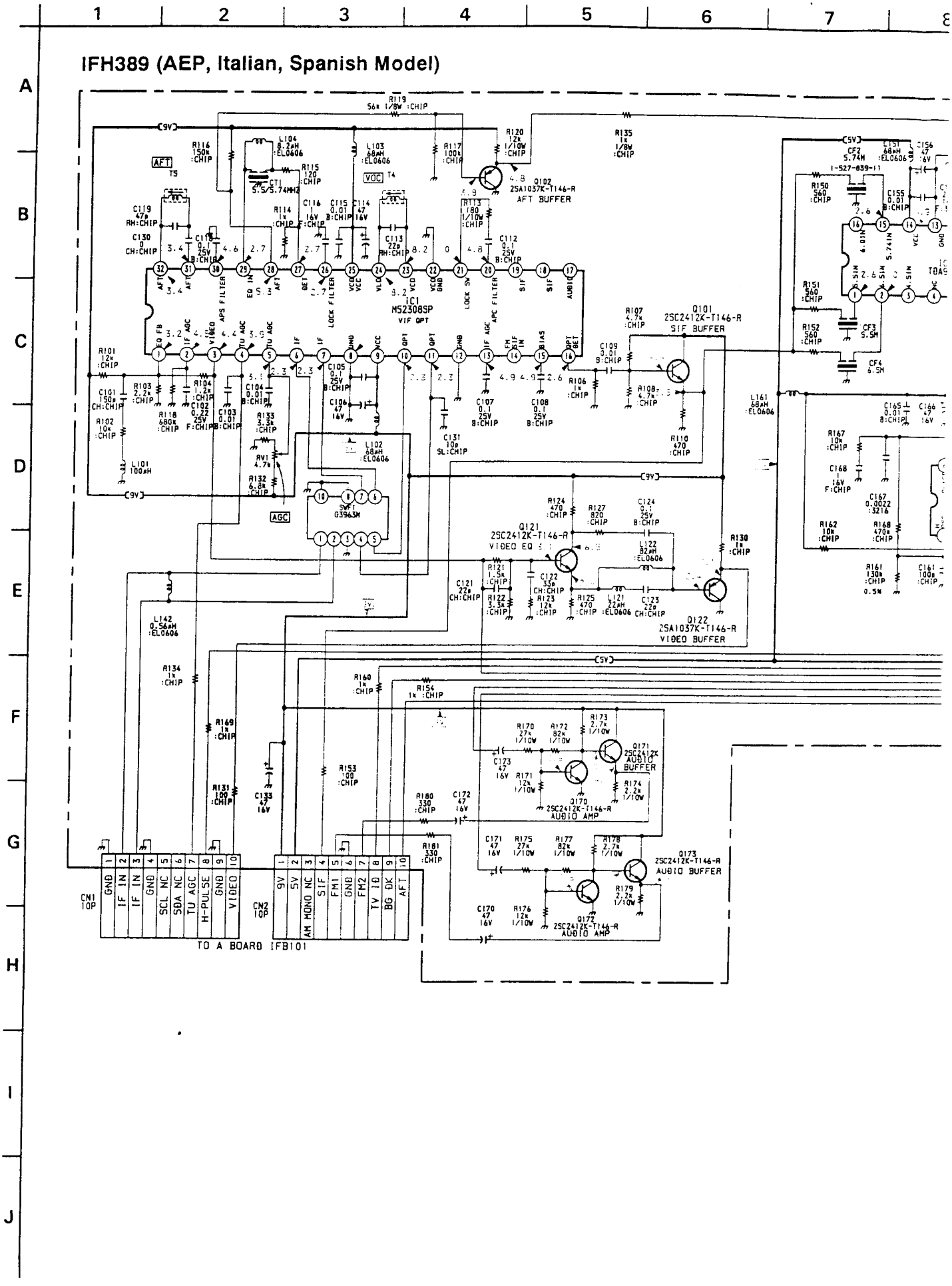

3 4 5 6 7 8 9 10

, Spanish Model)

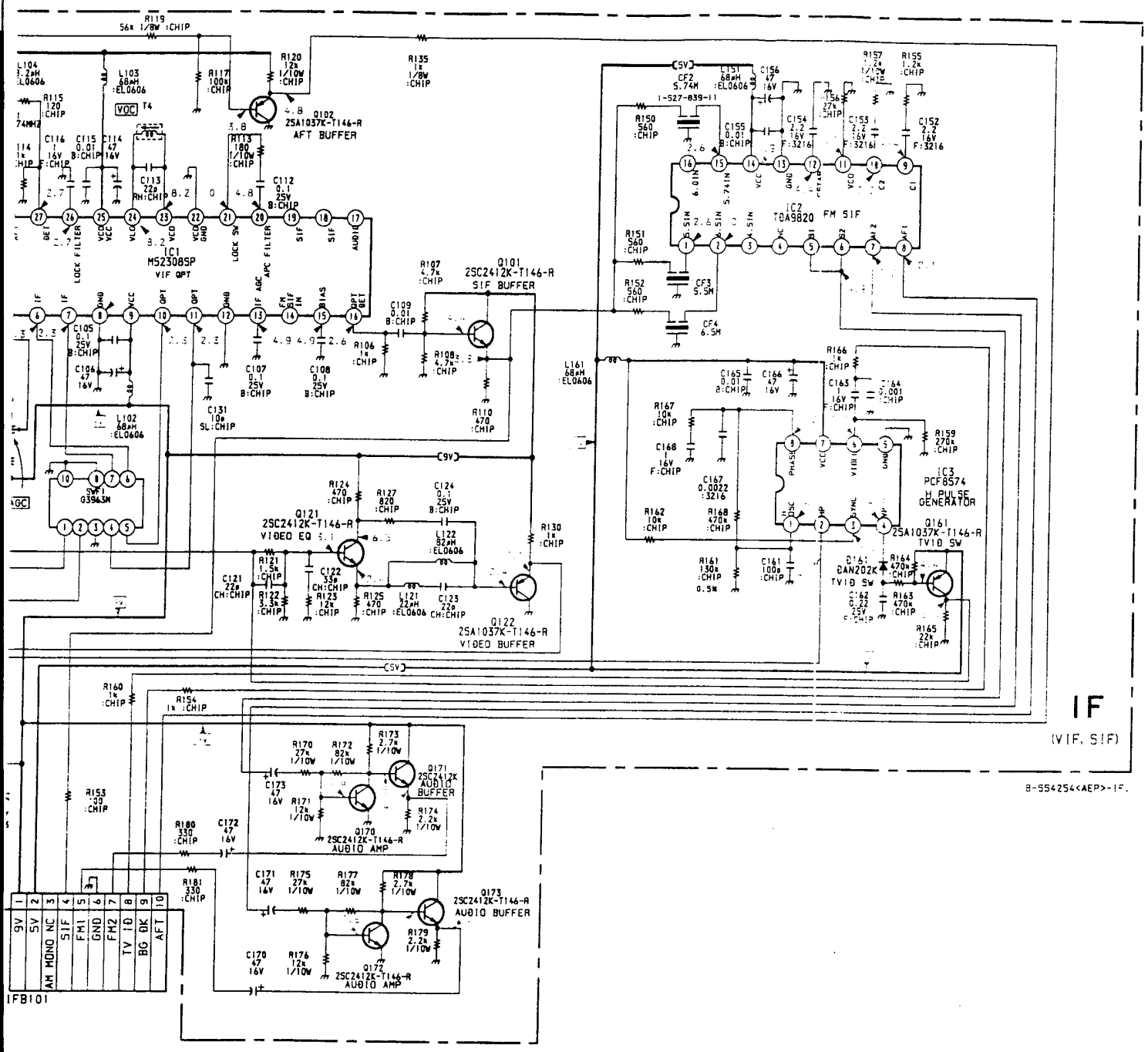

8 | 9 | 10 | 11 | 12 | 13 | 14 | 15

IFH385 (UK Model)

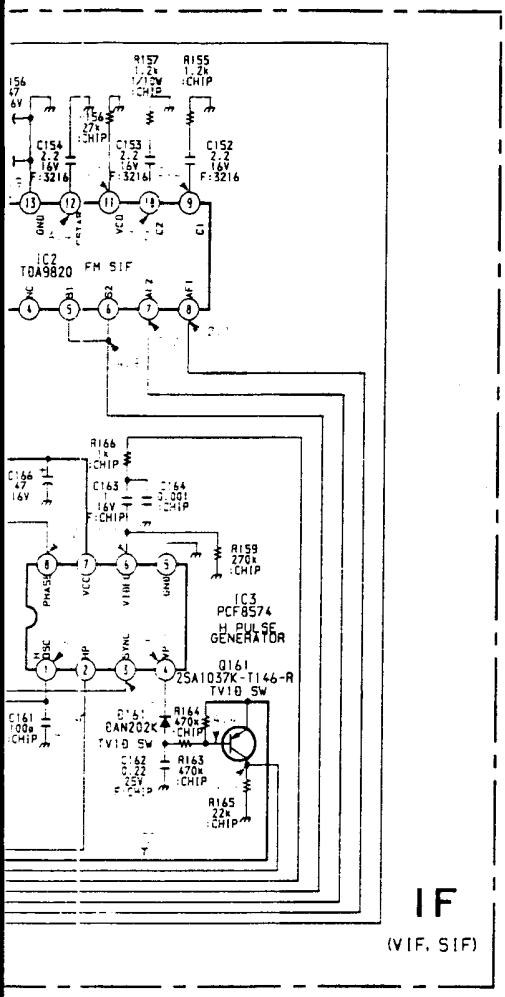

B-SS4254<AEP>-IF.

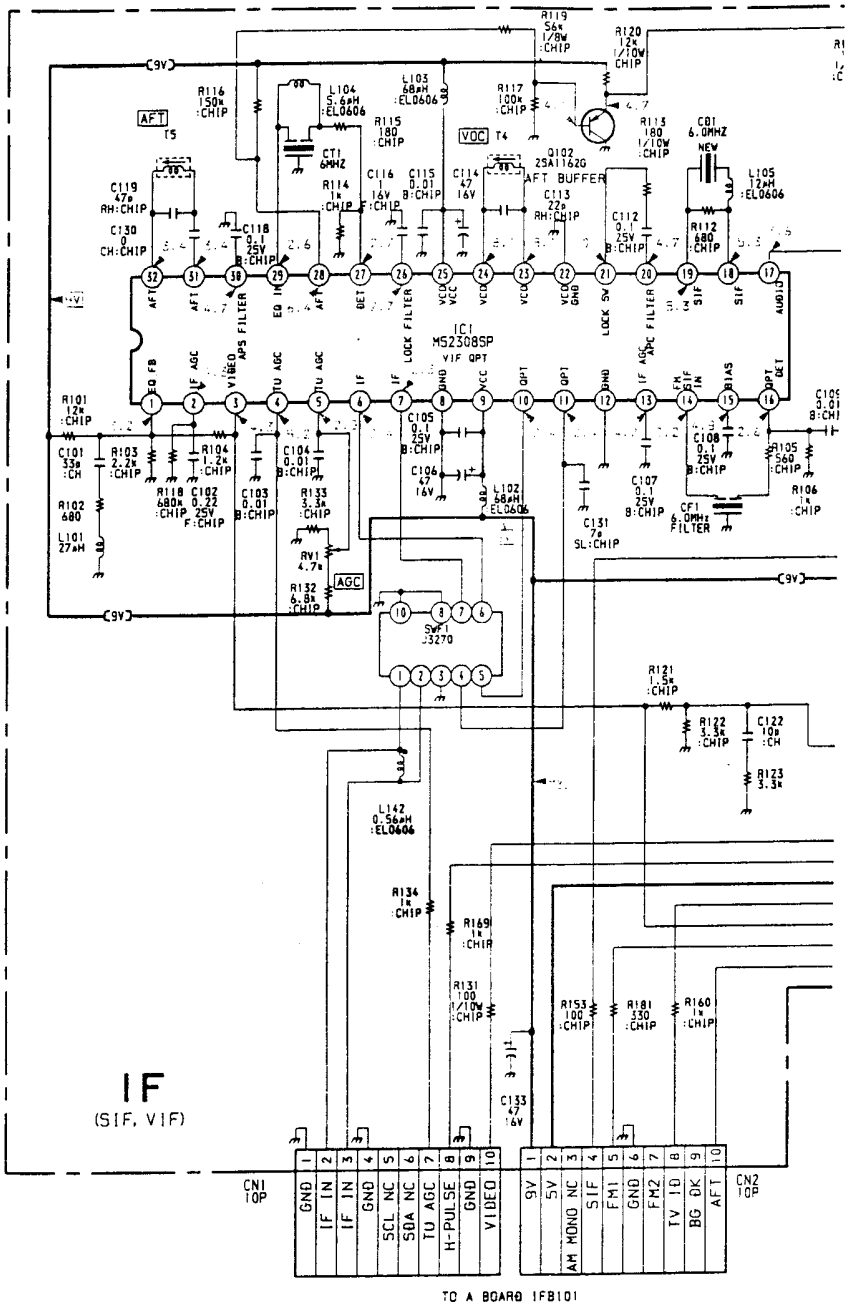

15 | 16 | 17 | 18 | 19 | 20

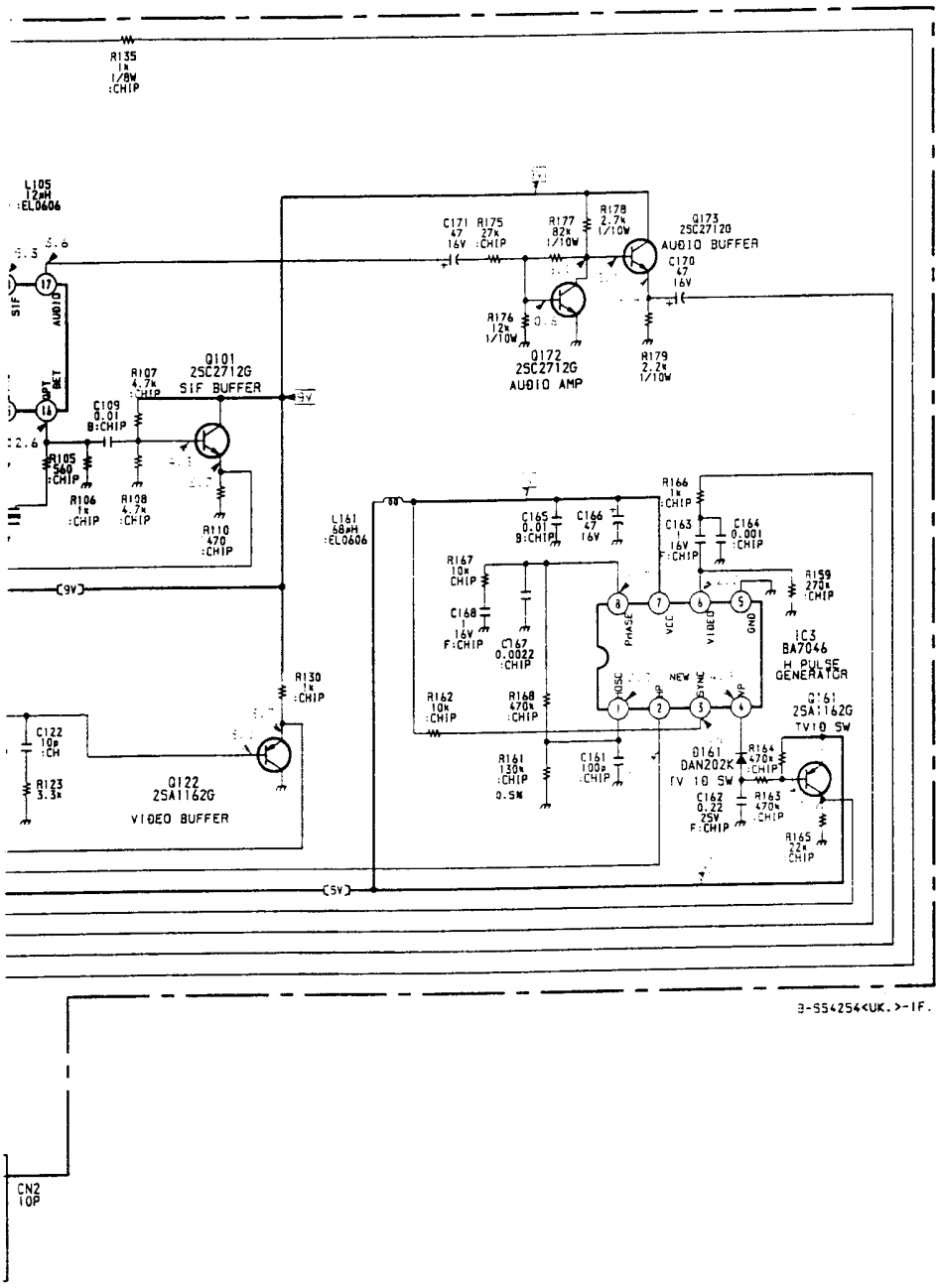

3-554254<UK.>-IF.

– IF BOA

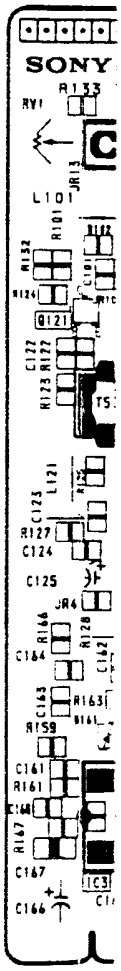

• IF BOARD IC2 TDA9

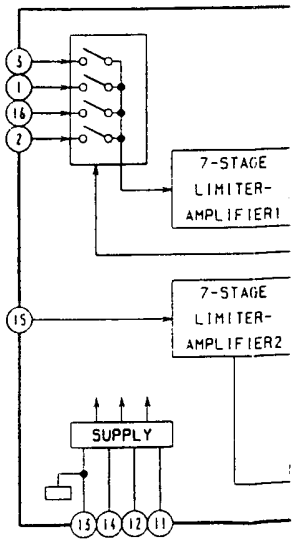

17 | 18 | 19 | 20

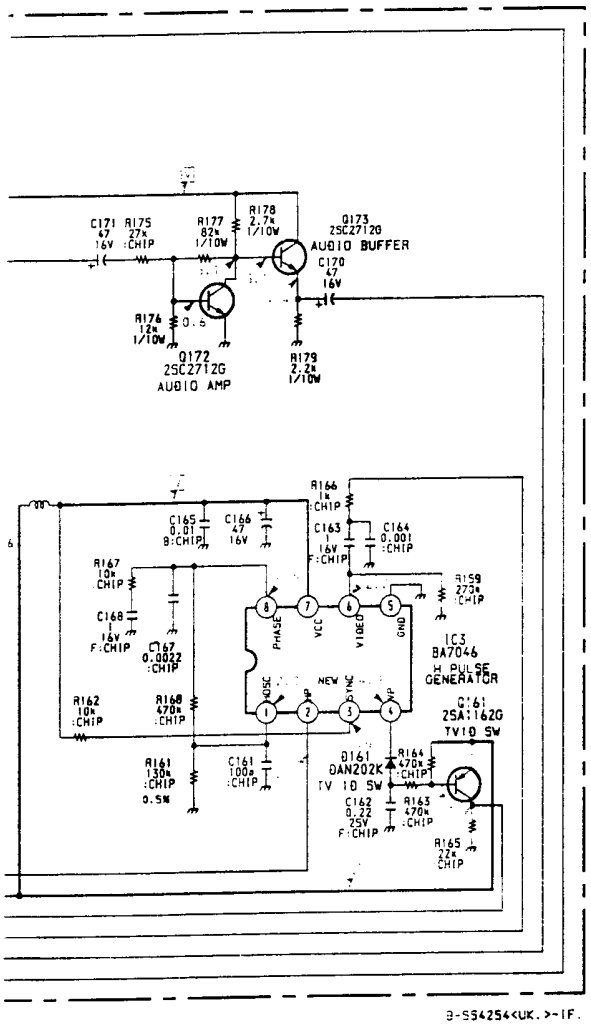

B-SS4254<UK.>-IF.

IF [VIF, SIF]

– IF BOARD – (AEP, Italian, Spanish Model)

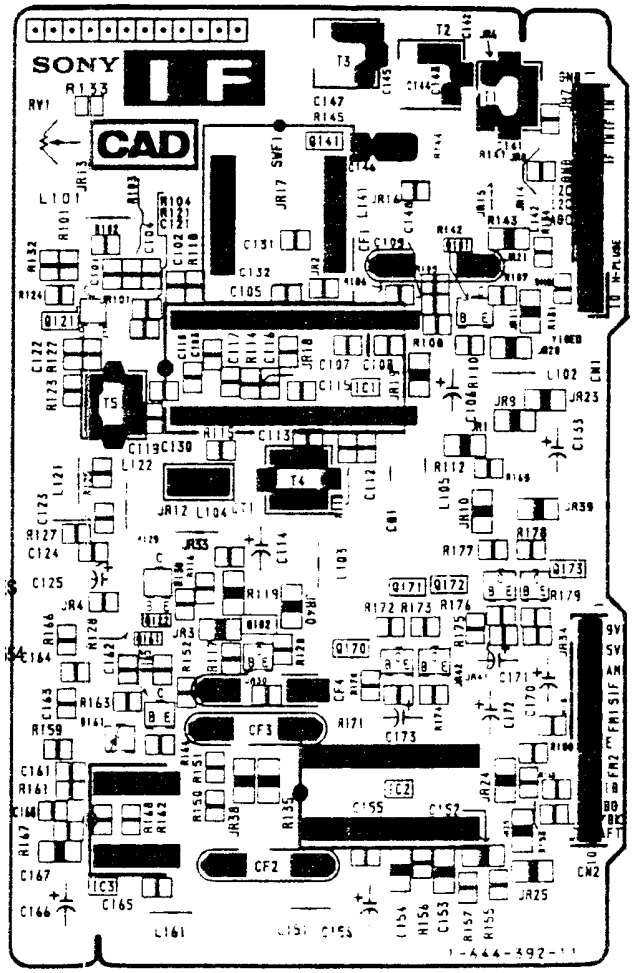

• IF BOARD IC2 TDA9820 (AEP, Italian, Spanish Model)

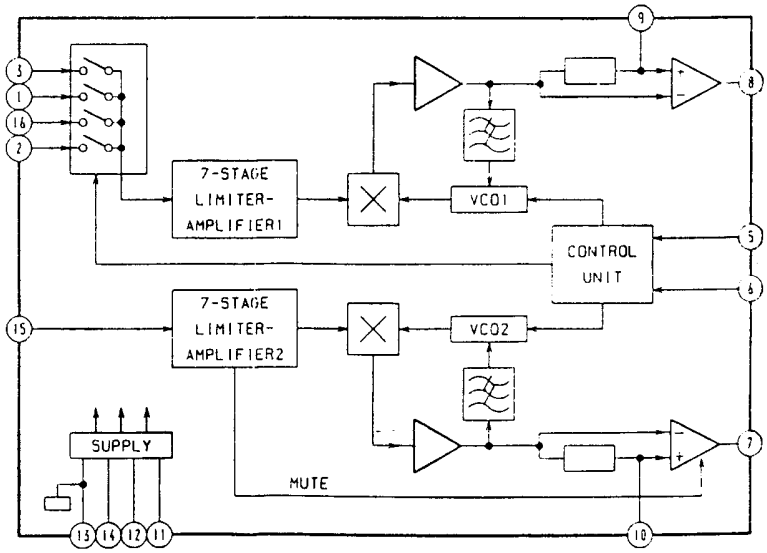

[VIF, SIF]

OARD – (AEP, Italian, Spanish Model)

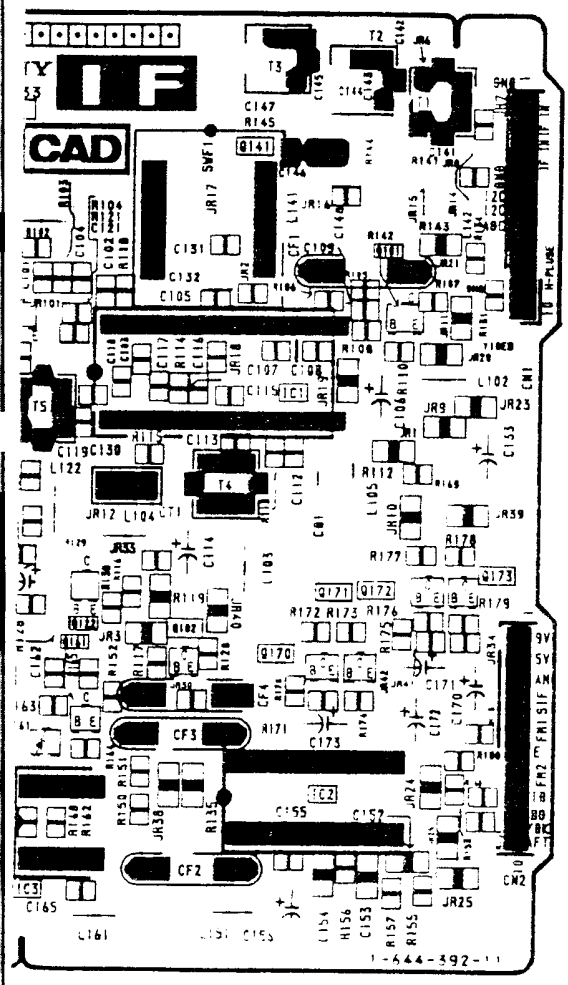

– IF BOARD – (UK Model)

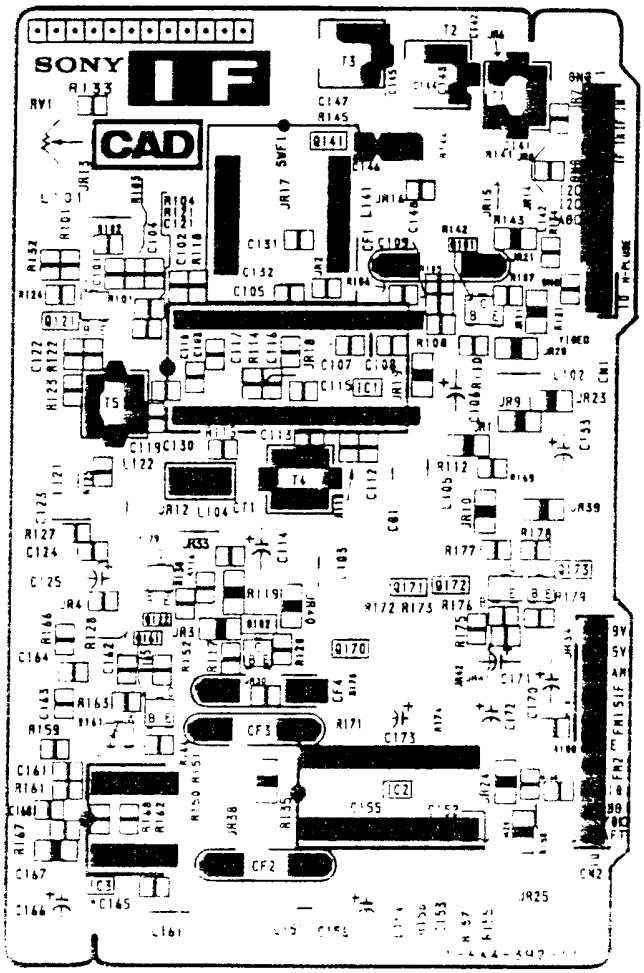

A9820 (AEP, Italian, Spanish Model)

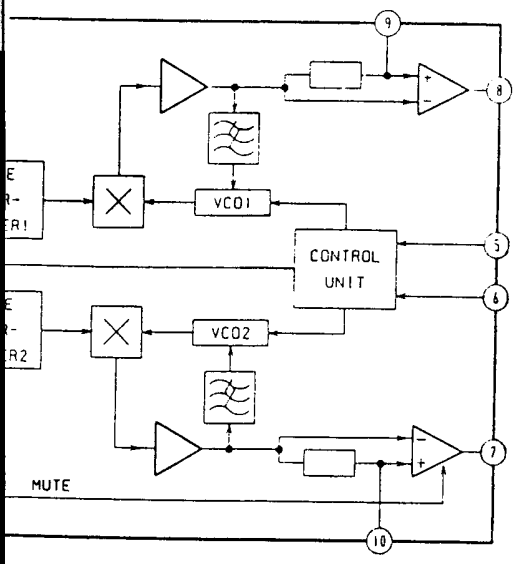

• IF BOARD IC3 BA7046 (AEP, Italian, Spanish Model)

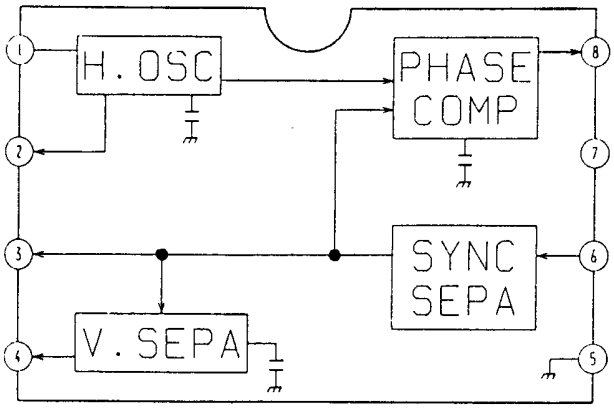

5-4. SCHEMATIC DIAGRAM OF TUNER A BOARD TU101 UV916H

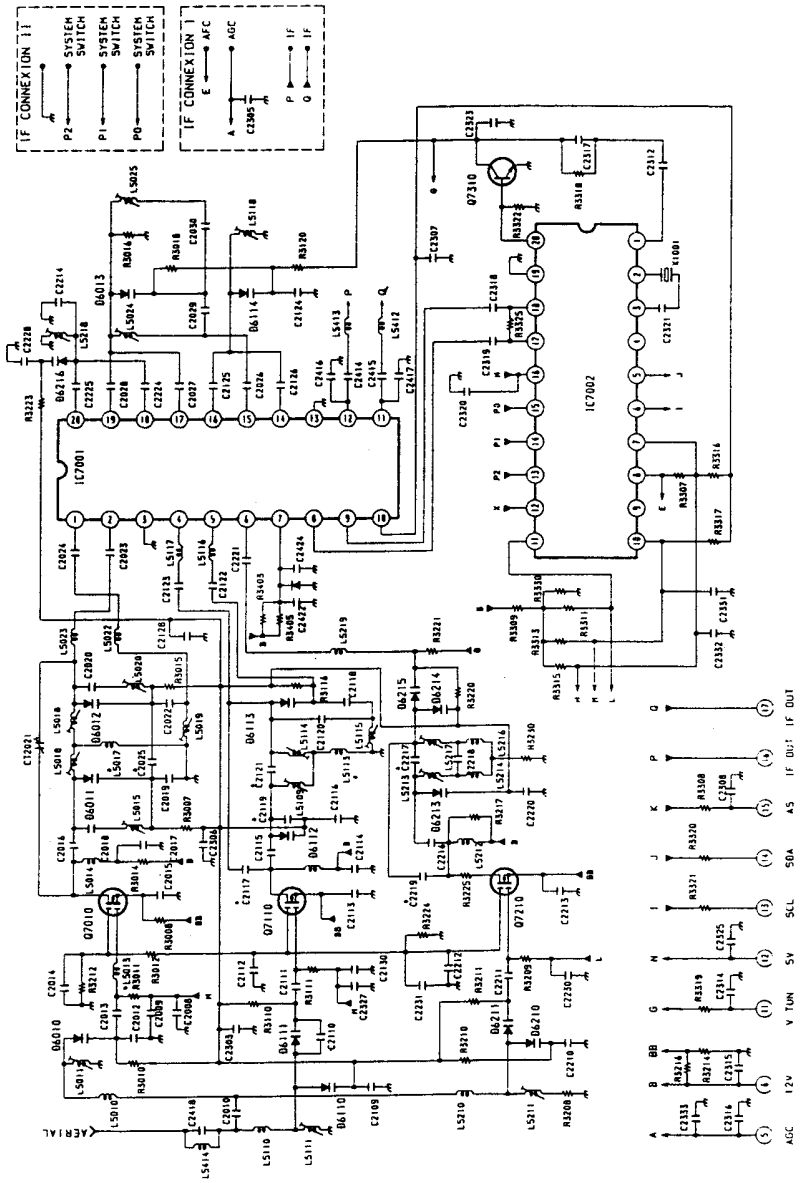

5-5. SEMICONDUCTORS

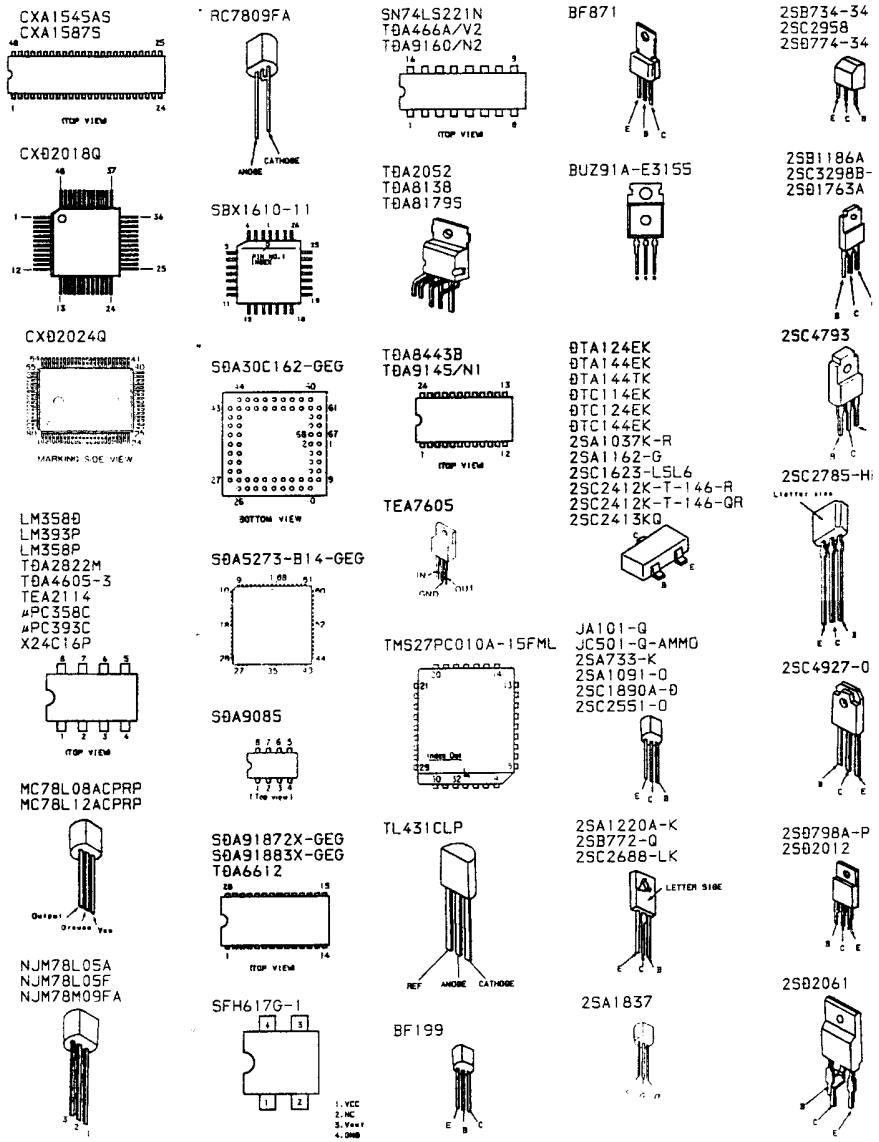

2SD2096-EF

2SK1916-53-F50

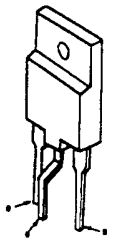

DAN202K
DAP202K
1S2836

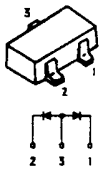

DA204K

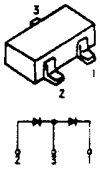

1SS226

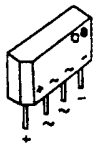

D5L60

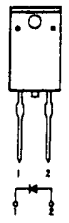

D10SC6M

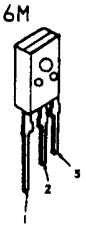

DGP20G
ERC25-06S
RGP02-20EL-6394
RU30ALFS1
RU3AM

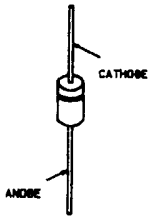

EL1Z
ERB44-06
GP08D
RGP10GPKG23
RGP15GPKG23
R2K-V1
1N4148A-T265

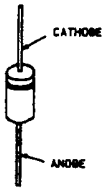

ERA85-009
MTZJ-T-77-12B
MTZJ-T-77-13C
MTZJ-T-77-15A
MTZJ-T-77-2.2A
MTZJ-T-77-3.6A
MTZJ-T-77-30B
MTZJ-T-77-33C
MTZJ-T-77-39C
MTZJ-T-77-5.6A
MTZJ-T-77-5.6B
MTZJ-T-77-7.5A
MTZJ-T-77-9.1
MTZN-1013
RD12ES-B2
RD5.6ES-B1
RD5.6ES-B2
RD6.2ES-B2
RD7.5ES-B2

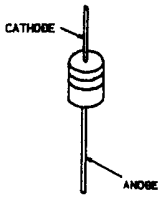

ESAB92-02

ESAC92M-02

MA152WK

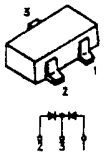

MA3030-H (TK)
MA3039H-TX
MA3047L-TX

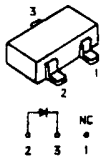

MA3051L-TX

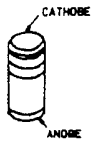

RGP02-17EL-6433

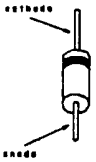

LD201VR

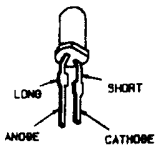

SECTION 6
EXPLODED VIEWS

NOTE :

- Items with no part number and no description are not stocked because they are seldom required for routine service.
- The construction parts of an assembled part are indicated with a collation number in the remarks column.
- Items marked " * " are not stocked since they are seldom required for routine service. Some delay should be anticipated when ordering these items.

The components identified by shading and marked ! are critical for safety.
Replace only with the part number specified.

6-1. CHASSIS

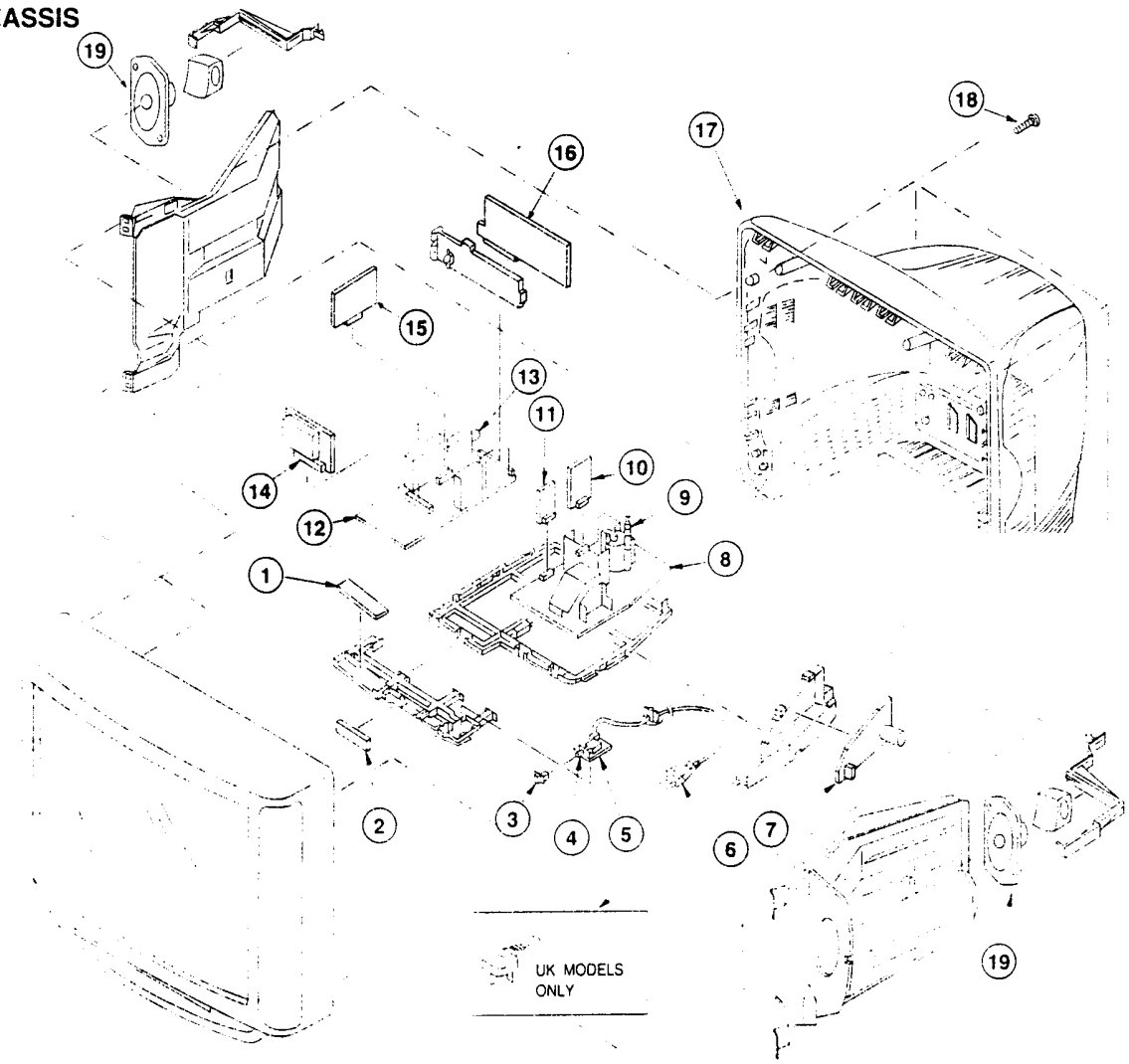

REF NO	PART NO	DESCRIPTION	REMARK
1	*A-1646-045-A	H1 BOARD, COMPLETE	
2	*1-650-759-11	H2 BOARD	
3	4-202-637-01	BUTTON, POWER	
4	! 1-571-433-11	SWITCH, PUSH (AC POWER)	
5	*1-648-312-11	F1 BOARD	
6	! 1-751-680-11	CORD, POWER (WITH NOISE FILTER)	(KV-X2971A,X2971D,X2971K)
	! 1-690-270-21	CORD, POWER (WITH CONNECTOR)	(KV-X2971B,X2973E)
	! 1-590-762-11	CORD, POWER (WITH PLUG)	(KV-X2922U)
7	*A-1624-018-A	F2 BOARD, COMPLETE	
8	*A-1642-097-A	D BOARD, COMPLETE	
9	! 1-453-153-11	TRANSFORMER ASSY, FLYBACK (NX-JU2602A2)	
10	*A-1642-116-A	D4 BOARD, COMPLETE	
11	*A-1640-109-A	D5 BOARD, COMPLETE	
12	*A-1632-170-A	A BOARD, COMPLETE	(KV-X2971A,X2921D,X2971K)
	*A-1632-183-A	A BOARD, COMPLETE	(KV-X2971B)
	*A-1632-177-A	A BOARD, COMPLETE	(KV-X2972U)
	*A-1632-180-A	A BOARD, COMPLETE	(KV-X2973E)
13	1-693-184-11	TUNER (U944C)	(KV-X2972U)
	1-693-185-11	TUNER (UV916H)	(KV-X2971B,X2971D X2971K,X2973E,X2971A)
14	*A-1635-015-A	M2 BOARD, COMPLETE	
15	*A-1632-178-A	A1 BOARD, COMPLETE	(KV-X2972U)
	*A-1632-179-A	A1 BOARD, COMPLETE	(KV-X2973E)
16	*A-1651-057-A	J BOARD, COMPLETE	
17	4-043-530-01	COVER REAR	
18	4-039-358-11	SCREW (4x16), (+) BV TAPPING	
19	1-544-728-11	SPEAKER	

6-2. PICTURE TUBE

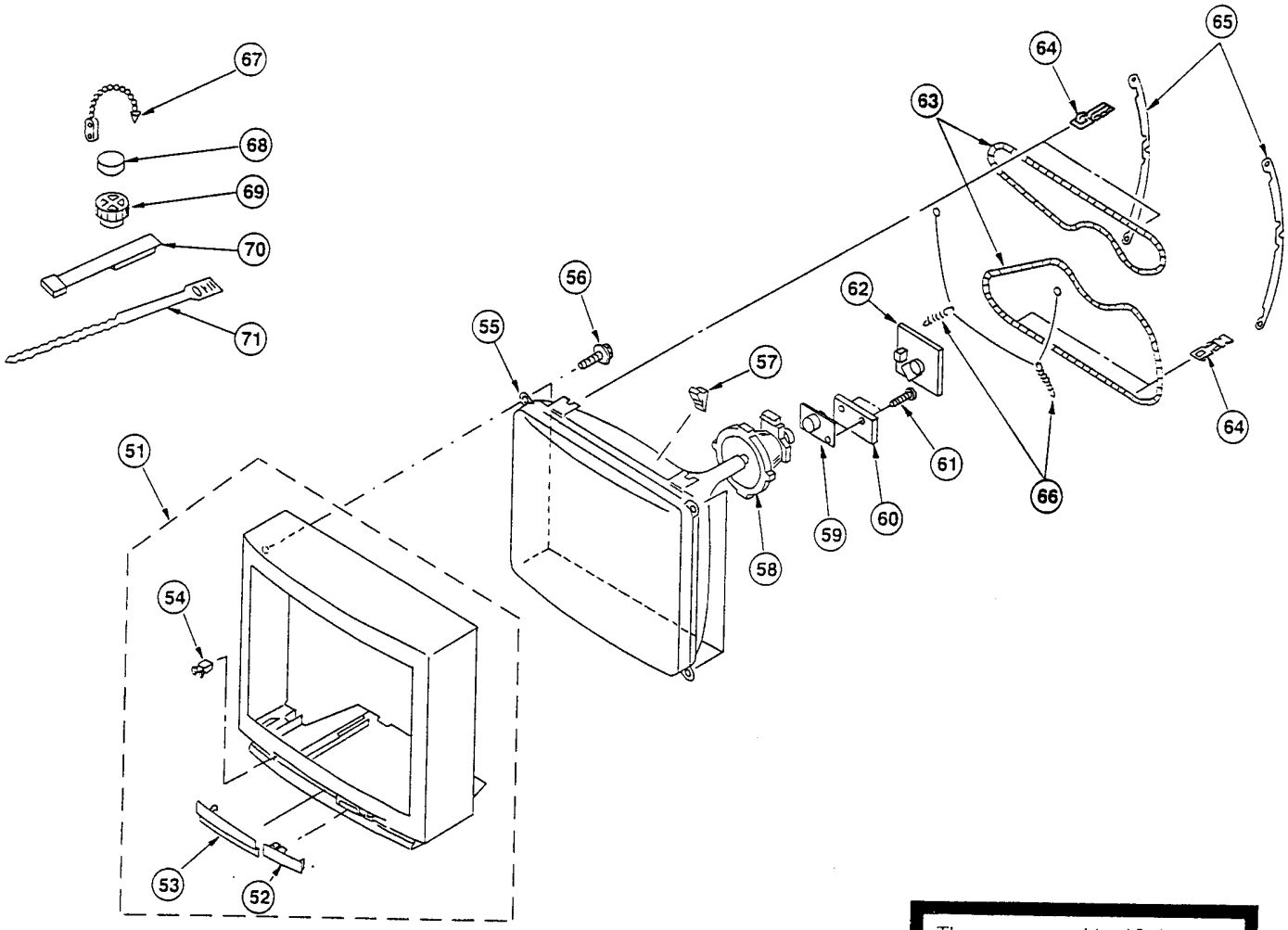

The components identified by shading and marked ⚠ are critical for safety.
Replace only with the part number specified.

REF NO		PART NO	DESCRIPTION	REMARK
51		4-4031-666-1	CABINET ASSY (WITH BEZEL ASSY) 52-54	
52		4-202-643-01	WINDOW, ORNAMENTAL	
53		4-202-642-01	DOOR	
54		4-392-036-01	CATCHER, PUSH	
55	⚠	8-733-841-05	PICTURE TUBE (M68KZT10X)	
56		4-036-188-01	SCREW (M), PT	
57		3-704-495-01	SPACER, DY	
58	⚠	8-451-422-11	DEFLECTION YOKE (Y29GXA)	
59	⚠	1-452-509-11	NECK ASSY, PICTURE TUBE (NA308)	
60		*A-1644-040-A	VM BOARD, COMPLETE	
61		4-039-357-01	SCREW 3x8, BV TAPPING	
62		*A-1638-042-A	C BOARD, COMPLETE	
63	⚠	1-406-807-21	COIL, DEGAUSSING	
64		4-202-415-01	CLIP, DGC (29")	
65		4-202-416-01	BAND, DGC	
66		4-200-433-01	SPRING, EXTENSION	
67		4-308-870-00	CLIP, LEAD WIRE	
68		1-452-032-00	MAGNET, DISK; 10MM	
69		1-452-094-00	MAGNET, ROTATABLE DISK; 15MM	
70		X-4306-312-0	PERMALLOY ASSY, CONVERGENCE	
71		3-701-007-00	BAND, BINDING	

ELECTRICAL PARTS LIST

SECTION 7

The components identified by shading and marked ⚠ are critical for safety.
Replace only with the part number specified.

For Service Manuals Contact
MAURITRON TECHNICAL SERVICES
8 Cherry Tree Rd, Chinnor
Oxon OX9 4QY
Tel:- 01844-351694 Fax:- 01844-352554
Email:- enquiries@mauritron.co.uk

- Items marked " * " are not stocked since they are seldom required for routine service. Some delay should be anticipated when ordering these items.
- All variable and adjustable resistors have characteristic curve B, unless otherwise noted.

RESISTORS

- All resistors are in ohms
- F : nonflammable

When indicating parts by reference number, please include the board name.

CAPACITORS — MF : mF, PF : mmF

COILS — MMH : mH, uH : mH

F2 F1 A1 (KV-X2972U / KV-X2973E)

REF.NO.		PART NO.	DESCRIPTION				REMARK
		*A-1624-018-A	F2 BOARD, COMPLETE (KV-X2971A, X2971D, X2971K)				
		*A-1624-036-A	F2 BOARD, COMPLETE (KV-X2971B, X2973E, X2972U)				
			< CAPACITOR >				
C661	⚠	1-136-519-12	FILM	0.47MF	20%	300V	
C662	⚠	1-136-518-12	FILM	0.33MF	20%	300V	
C664	⚠	1-164-503-61	CERAMIC	0.0022MF	20%	400V	
C666		1-124-479-11	ELECT	330MF	20%	25V	
C667		1-126-337-11	ELECT	22MF	20%	50V	
C672	⚠	1-161-964-61	CERAMIC	0.0047MF		250V	
C673	⚠	1-161-964-61	CERAMIC	0.0047MF		250V	
C674		1-125-555-11	ELECT	330MF	20%	400V	
			< CONNECTOR >				
CN0005		1-508-765-00	PIN, CONNECTOR (5MM PITCH) 3P				
CN0007		1-508-786-00	PIN, CONNECTOR (5MM PITCH) 2P				
CN0924		*1-568-878-51	PIN, CONNECTOR 3P				
CN0925		*1-695-294-11	PIN, CONNECTOR (PC BOARD) 6P				
CN0929		1-508-784-00	PIN, CONNECTOR (5MM PITCH) 1P				
CN0931	⚠	*1-691-291-11	PIN, CONNECTOR (PC BOARD) 5P				
			< DIODE >				
D661		8-719-901-33	DIODE 1SS133				
D663		8-719-510-53	DIODE D4SB60L				
D664		8-719-109-89	DIODE RD5.6ESB2				
			< TRANSFORMER >				
LF661	⚠	1-423-688-11	TRANSFORMER, LINE FILTER (LFT)				
LF662	⚠	1-424-391-11	TRANSFORMER, LINE FILTER (KV-X2971A,X2971D,X2971K)				
			< TRANSISTOR >				
Q661		8-729-920-74	TRANSISTOR 2SC2412K-QR				
			< RESISTOR >				
R663	⚠	1-244-945-91	CARBON	1M	5%	1/2W	
R664	⚠	1-205-949-11	WIREWOUND	1.8	5%	10W	
R665	⚠	1-218-265-11	METAL GLAZE	8.2M	5%	1W	
R666		1-247-807-31	CARBON	100	5%	1/4W	F
R667		1-249-430-11	CARBON	12K	5%	1/4W	
R668		1-249-436-11	CARBON	39K	5%	1/4W	
R669	⚠	1-205-949-11	WIREWOUND	1.8	5%	10W	
R671		1-249-417-11	CARBON	1K	5%	1/4W	F
			< RELAY >				
RY661	⚠	1-515-720-31	RELAY				
			< THERMISTOR >				
THP661	⚠	1-809-827-11	THERMISTOR, POSITIVE				
			**********				
		*1-648-312-11	F1 BOARD ********				
			< CONNECTOR >				
CN0003	⚠	*1-580-844-11	PIN, CONNECTOR (POWER)				
CN0831	⚠	*1-695-292-11	PIN, CONNECTOR (POWER)				
			< FUSE >				
F651	⚠	1-576-232-21	FUSE (H.B.C.) 5A/250V				
			< SWITCH >				
S651	⚠	1-571-433-11	SWITCH, PUSH (AC POWER)				
			**********				
		*A-1632-179-A	A1 BOARD, COMPLETE (KV-X2973E) **********				
		*A-1632-178-A	A1 BOARD, COMPLETE (KV-X2972U) **********				
			< CAPACITOR >				
C1101		1-126-101-11	ELECT	100MF	20%	16V	
C1102		1-126-101-11	ELECT	100MF	20%	16V	
C1103		1-163-077-00	CERAMIC CHIP	0.1MF	10%	25V	
C1104		1-163-077-00	CERAMIC CHIP	0.1MF	10%	25V	
C1105		1-164-489-11	CERMAIC CHIP	0.22MF	10%	16V	
C1106		1-163-383-91	CERAMIC CHIP	180PF	5%	50V	
C1107		1-163-009-11	CERAMIC CHIP	0.001MF	10%	50V	
C1108		1-163-059-00	CERAMIC CHIP	0.01MF		50V	
C1109		1-163-033-00	CERAMIC CHIP	0.022MF		50V	
C1110		1-164-336-11	CERMAIC CHIP	0.33MF		25V	
C1111		1-163-009-11	CERAMIC CHIP	0.001MF	10%	50V	
C1112		1-164-161-11	CERAMIC CHIP	0.0022MF	10%	50V	
C1113		1-124-477-11	ELECT	47MF	20%	16V	
C1114		1-163-038-00	CERAMIC CHIP	0.1MF		25V	
C1115		1-124-477-11	ELECT	47MF	20%	16V	

A1 (KV-X2972U / KV-X2973E)

REF.NO.	PART NO.	DESCRIPTION			REMARK
C1116	1-106-228-00	MYLAR	0.22MF	10%	100V
C1117	1-163-081-00	CERAMIC CHIP	0.22MF		25V
C1118	1-163-113-00	CERAMIC CHIP	68PF	5%	50V
C1119	1-163-129-00	CERAMIC CHIP	330PF	5%	50V
C1120	1-163-193-00	CERAMIC CHIP	330PF	5%	50V
C1121	1-163-113-00	CERAMIC CHIP	68PF	5%	50V
C1122	1-163-081-00	CERAMIC CHIP	0.22MF		25V
C1123	1-106-228-00	MYLAR	0.22MF	10%	100V
C1124	1-124-477-11	ELECT	47MF	20%	16V
C1125	1-124-477-11	ELECT	47MF	20%	16V
C1126	1-163-077-00	CERAMIC CHIP	0.1MF	10%	25V
C1127	1-163-038-00	CERAMIC CHIP	0.1MF		25V
C1128	1-124-477-11	ELECT	47MF	20%	16V
C1129	1-163-038-00	CERAMIC CHIP	0.1MF		25V
C1130	1-163-205-00	CERAMIC CHIP	0.001MF	10%	50V
C1131	1-163-059-00	CERAMIC CHIP	0.01MF		50V
C1132	1-163-038-00	CERAMIC CHIP	0.1MF		25V
C1133	1-124-907-11	ELECT	10MF	20%	50V
C1134	1-163-009-11	CERAMIC CHIP	0.001MF	10%	50V
C1135	1-163-038-00	CERAMIC CHIP	0.1MF		25V
C1136	1-163-117-00	CERAMIC CHIP	100PF	5%	50V
C1137	1-163-038-00	CERAMIC CHIP	0.1MF		25V
C1138	1-163-105-00	CERAMIC CHIP	33PF	5%	50V
C1139	1-163-105-00	CERAMIC CHIP	33PF	5%	50V
C1140	1-163-117-00	CERAMIC CHIP	100PF	5%	50V
C1141	1-163-205-00	CERAMIC CHIP	0.001MF	10%	50V
C1142	1-163-057-00	CERAMIC CHIP	0.0068MF		50V
C1143	1-163-003-11	CERAMIC CHIP	330PF	10%	50V
C1144	1-163-121-00	CERAMIC CHIP	150PF	5%	50V
C1145	1-163-121-00	CERAMIC CHIP	150PF	5%	50V
C1146	1-163-038-00	CERAMIC CHIP	0.1MF		25V
C1147	1-124-477-11	ELECT	47MF	20%	16V
C1148	1-164-161-11	CERAMIC CHIP	0.0022MF	10%	50V
C1149	1-124-477-11	ELECT	47MF	20%	16V
C1150	1-163-038-00	CERAMIC CHIP	0.1MF		25V
C1151	1-163-038-00	CERAMIC CHIP	0.1MF		25V
C1152	1-124-477-11	ELECT	47MF	20%	16V
C1153	1-163-087-00	CERAMIC CHIP	4PF	0.25PF	50V
C1154	1-163-038-00	CERAMIC CHIP	0.1MF		25V
C1155	1-124-477-11	ELECT	47MF	20%	16V
C1156	1-163-009-11	CERAMIC CHIP	0.001MF	10%	50V
C1157	1-163-009-11	CERAMIC CHIP	0.001MF	10%	50V
C1158	1-163-038-00	CERAMIC CHIP	0.1MF		25V
C1159	1-163-243-11	CERAMIC CHIP	47PF	5%	50V (KV-X2972U)

< FILTER >

BP1101	1-236-238-12	FILTER, BAND PASS (KV-X2972U)
	1-239-047-11	FILTER, BAND PASS (KV-X2973E)
CF1101	1-409-333-00	TRAP, CERAMIC (6.0MHZ) (KV-X2972U)
CF1102	1-404-134-00	TRAP, CERAMIC (5.5MHZ) (KV-X2973E)

< CONNECTOR >

CN0201	1-695-300-11	CONNECTOR, BOARD TO BOARD 20P

< DIODE >

D1101	8-719-914-44	DIODE DAP202K
D1102	8-719-027-70	DIODE 1SV217-TPH3
D1103	8-719-820-71	DIODE 1SV214

< FERRITE BEAD >

FB1101	1-410-396-41	FERRITE BEAD INDUCTOR 0.45UH
FB1102	1-410-396-41	FERRITE BEAD INDUCTOR 0.45UH
FB1103	1-410-396-41	FERRITE BEAD INDUCTOR 0.45UH
FB1104	1-410-396-41	FERRITE BEAD INDUCTOR 0.45UH
FB1105	1-410-396-41	FERRITE BEAD INDUCTOR 0.45UH

< IC >

IC1101	8-759-511-88	IC TDA8732
IC1102	8-759-184-28	IC SAA7282-ZP

< COIL >

L1101	1-408-405-00	INDUCTOR 4.7UH
L1102	1-408-405-00	INDUCTOR 4.7UH
L1103	1-410-119-11	INDUCTOR 1MMH
L1104	1-410-119-11	INDUCTOR 1MMH
L1105	1-408-411-00	INDUCTOR 15UH (KV-X2972U)

< TRANSISTOR >

Q1101	8-729-920-74	TRANSISTOR 2SC2412K-QR
Q1102	8-729-920-74	TRANSISTOR 2SC2412K-QR
Q1103	8-729-920-74	TRANSISTOR 2SC2412K-QR
Q1104	8-729-920-74	TRANSISTOR 2SC2412K-QR
Q1105	8-729-920-74	TRANSISTOR 2SC2412K-QR
Q1106	8-729-920-74	TRANSISTOR 2SC2412K-QR
Q1107	8-729-920-74	TRANSISTOR 2SC2412K-QR
Q1108	8-729-920-74	TRANSISTOR 2SC2412K-QR

< RESISTOR >

REF.NO.	PART NO.	DESCRIPTION			REMARK
JR1101	1-216-296-91	METAL GLAZE	0	5%	1/8W (KV-X2973E)
JR1102	1-216-296-91	METAL GLAZE	0	5%	1/8W
JR1103	1-216-296-91	METAL GLAZE	0	5%	1/8W
JR1104	1-216-295-91	METAL GLAZE	0	5%	1/10W
R1101	1-216-188-00	METAL GLAZE	390	5%	1/8W
R1102	1-216-049-00	METAL GLAZE	1K	5%	1/10W
R1103	1-216-049-00	METAL GLAZE	1K	5%	1/10W
R1104	1-216-041-00	METAL GLAZE	470	5%	1/10W
R1105	1-216-005-00	METAL GLAZE	15	5%	1/10W
R1106	1-216-185-00	METAL GLAZE	300	5%	1/8W
R1107	1-216-042-00	METAL GLAZE	510	5%	1/10W
R1108	1-216-063-00	METAL GLAZE	3.9K	5%	1/10W
R1109	1-216-202-00	METAL GLAZE	1.5K	5%	1/8W
R1110	1-216-196-00	METAL GLAZE	820	5%	1/8W
R1111	1-216-041-00	METAL GLAZE	470	5%	1/10W
R1112	1-216-051-00	METAL GLAZE	1.2K	5%	1/10W
R1113	1-216-001-00	METAL GLAZE	10	5%	1/10W
R1114	1-216-105-00	METAL GLAZE	220K	5%	1/10W
R1115	1-216-121-00	METAL GLAZE	1M	5%	1/10W
R1116	1-216-049-00	METAL GLAZE	1K	5%	1/10W
R1117	1-216-097-00	METAL GLAZE	100K	5%	1/10W
R1118	1-216-097-00	METAL GLAZE	100K	5%	1/10W
R1119	1-216-073-00	METAL GLAZE	10K	5%	1/10W
R1120	1-216-232-00	METAL GLAZE	27K	5%	1/8W
R1121	1-216-081-00	METAL GLAZE	22K	5%	1/10W
R1122	1-216-158-00	METAL GLAZE	22	5%	1/8W
R1123	1-216-158-00	METAL GLAZE	22	5%	1/8W
R1124	1-216-089-91	METAL GLAZE	47K	5%	1/10W
R1125	1-216-097-00	METAL GLAZE	100K	5%	1/10W
R1126	1-216-218-00	METAL GLAZE	6.8K	5%	1/8W

A1 (KV-X2972U / KV-X2973E) A

REF.NO.	PART NO.	DESCRIPTION				REMARK
R1127	1-216-097-00	METAL GLAZE	100K	5%	1/10W	
R1128	1-216-089-91	METAL GLAZE	47K	5%	1/10W	
R1129	1-216-089-91	METAL GLAZE	47K	5%	1/10W	
R1130	1-216-246-91	METAL GLAZE	100K	5%	1/8W	
R1131	1-216-218-00	METAL GLAZE	6.8K	5%	1/8W	
R1132	1-216-097-00	METAL GLAZE	100K	5%	1/10W	
R1133	1-216-089-91	METAL GLAZE	47K	5%	1/10W	
R1134	1-216-212-00	METAL GLAZE	3.9K	5%	1/8W	
R1135	1-216-081-00	METAL GLAZE	22K	5%	1/10W	
R1136	1-216-081-00	METAL GLAZE	22K	5%	1/10W	
R1137	1-216-095-00	METAL GLAZE	82K	5%	1/10W	
R1138	1-216-097-00	METAL GLAZE	100K	5%	1/10W	
R1139	1-216-005-00	METAL GLAZE	15	5%	1/10W	
R1140	1-216-061-00	METAL GLAZE	3.3K	5%	1/10W	
R1141	1-216-061-00	METAL GLAZE	3.3K	5%	1/10W	
R1142	1-216-033-00	METAL GLAZE	220	5%	1/10W	
R1143	1-216-049-00	METAL GLAZE	1K	5%	1/10W	
R1144	1-216-049-00	METAL GLAZE	1K	5%	1/10W	
R1145	1-216-001-00	METAL GLAZE	10	5%	1/10W	
R1146	1-216-049-00	METAL GLAZE	1K	5%	1/10W	
R1147	1-216-045-00	METAL GLAZE	680	5%	1/10W	
R1148	1-216-049-00	METAL GLAZE	1K	5%	1/10W	
R1149	1-216-001-00	METAL GLAZE	10	5%	1/10W	
R1150	1-216-045-00	METAL GLAZE	680	5%	1/10W	
R1151	1-216-049-00	METAL GLAZE	1K	5%	1/10W	
R1152	1-216-049-00	METAL GLAZE	1K	5%	1/10W	
R1153	1-216-049-00	METAL GLAZE	1K	5%	1/10W	
R1154	1-216-041-00	METAL GLAZE	470	5%	1/10W	

< CRYSTAL >

X1101	1-579-689-21	VIBRATOR, CRYSTAL
X1102	1-579-282-21	VIBRATOR, CRYSTAL (KV-X2973E)
	1-579-283-21	VIBRATOR, CRYSTAL (KV-X2972U)

****

*A-1632-170-A	A BOARD, COMPLETE (KV-X2971A,X2971D,	
	********** X2971K)	
*A-1632-183-A	A BOARD, COMPLETE (KV-X2971B)	
	**********	
*A-1632-179-A	A BOARD, COMPLETE (KV-X2973E)	
	**********	
*A-1632-180-A	A BOARD, COMPLETE (KV-X2972U)	
	**********	

< CAPACITOR >

REF.NO.	PART NO.	DESCRIPTION				REMARK
C071	1-126-108-11	ELECT	56MF	20%	16V	
C072	1-124-120-11	ELECT	220MF	20%	16V	
C074	1-163-001-11	CERAMIC CHIP	220PF	10%	50V	
C102	1-126-103-11	ELECT	470MF	20%	16V	
C103	1-163-031-11	CERAMIC CHIP	0.01MF		50V	
C104	1-124-477-11	ELECT	47MF	20%	16V	
C105	1-124-916-11	ELECT	22MF	20%	50V	
C106	1-124-927-11	ELECT	4.7MF	20%	50V	
C110	1-124-478-11	ELECT	100MF	20%	25V	
C120	1-163-031-11	CERAMIC CHIP	0.01MF		50V	
C201	1-130-489-00	FILM	0.033MF	5%	50V	
C202	1-130-489-00	FILM	0.033MF	5%	50V	
C203	1-164-005-11	CERAMIC CHIP	0.47MF		25V	
C204	1-164-005-11	CERAMIC CHIP	0.47MF		25V	
C205	1-124-907-11	ELECT	10MF	20%	50V	
C206	1-164-161-11	CERAMIC CHIP	0.0022MF	10%	50V	
C207	1-137-613-11	FILM	0.0018MF	2%	100V	
C208	1-164-005-11	CERAMIC CHIP	0.47MF		25V	
C209	1-164-005-11	CERAMIC CHIP	0.47MF		25V	
C210	1-164-005-11	CERAMIC CHIP	0.47MF		25V	
C213	1-163-023-00	CERAMIC CHIP	0.015MF	10%	50V	
C214	1-163-023-00	CERAMIC CHIP	0.015MF	10%	50V	
C215	1-163-809-11	CERAMIC CHIP	0.047MF	10%	25V	
C216	1-163-809-11	CERAMIC CHIP	0.047MF	10%	25V	
C217	1-124-925-11	ELECT	2.2MF	20%	50V	
C218	1-124-925-11	ELECT	2.2MF	20%	50V	
C219	1-163-011-11	CERAMIC CHIP	0.0015MF	10%	50V	
C220	1-163-011-11	CERAMIC CHIP	0.0015MF	10%	50V	
C221	1-124-925-11	ELECT	2.2MF	20%	50V	
C222	1-124-925-11	ELECT	2.2MF	20%	50V	
C223	1-136-177-00	FILM	1MF	5%	50V	
C224	1-136-177-00	FILM	1MF	5%	50V	
C225	1-164-182-11	CERAMIC CHIP	0.0033MF	10%	50V	
C226	1-163-007-11	CERAMIC CHIP	680PF	10%	50V	
C227	1-124-907-11	ELECT	10MF	20%	50V	
C228	1-124-907-11	ELECT	10MF	20%	50V	
C229	1-124-478-11	ELECT	100MF	20%	25V	
C230	1-124-478-11	ELECT	100MF	20%	25V	
C231	1-164-346-11	CERAMIC CHIP	1MF		16V	
C232	1-163-009-11	CERAMIC CHIP	0.001MF	10%	50V	
C233	1-163-009-11	CERAMIC CHIP	0.001MF	10%	50V	
C234	1-164-161-11	CERAMIC CHIP	0.0022MF	10%	50V	
C235	1-130-772-00	FILM	0.22MF	5%	63V	
C236	1-124-618-11	ELECT	2200MF	20%	35V	
C237	1-124-618-11	ELECT	2200MF	20%	35V	
C238	1-164-161-11	CERAMIC CHIP	0.0022MF	10%	50V	
C239	1-130-772-00	FILM	0.22MF	5%	63V	
C240	1-124-916-11	ELECT	22MF	20%	50V	
C241	1-124-916-11	ELECT	22MF	20%	50V	
C242	1-124-903-11	ELECT	1MF	20%	50V	
C244	1-164-232-11	CERAMIC CHIP	0.01MF	10%	50V	
C248	1-163-185-00	CERAMIC CHIP	150PF	5%	50V	
C249	1-163-129-00	CERAMIC CHIP	330PF	5%	50V	
C251	1-126-320-11	ELECT	10MF	20%	16V	
C254	1-163-133-00	CERAMIC CHIP	470PF	5%	50V	
C255	1-163-133-00	CERAMIC CHIP	470PF	5%	50V	
C256	1-163-133-00	CERAMIC CHIP	470PF	5%	50V	
C257	1-163-133-00	CERAMIC CHIP	470PF	5%	50V	
C299	1-164-337-11	CERAMIC CHIP	2.2MF		16V	
C301	1-163-038-00	CERAMIC CHIP	0.1MF		25V	
C302	1-163-038-00	CERAMIC CHIP	0.1MF		25V	
C303	1-164-337-11	CERAMIC CHIP	2.2MF		16V	
C304	1-164-004-11	CERAMIC CHIP	0.1MF	10%	25V	
C305	1-163-096-00	CERAMIC CHIP	13PF	5%	50V	
C306	1-163-097-00	CERAMIC CHIP	15PF	5%	50V	
C307	1-163-017-00	CERAMIC CHIP	0.0047MF	10%	50V	
C308	1-163-809-11	CERAMIC CHIP	0.047MF	10%	25V	
C309	1-164-004-11	CERAMIC CHIP	0.1MF	10%	25V	
C310	1-163-038-00	CERAMIC CHIP	0.1MF		25V	
C311	1-163-038-00	CERAMIC CHIP	0.1MF		25V	
C312	1-124-477-11	ELECT	47MF	20%	16V	
C313	1-163-077-91	CERAMIC CHIP	0.1MF		50V	
C314	1-163-038-00	CERAMIC CHIP	0.1MF		25V	
C315	1-124-477-11	ELECT	47MF	20%	16V	
C316	1-163-077-91	CERAMIC CHIP	0.1MF		50V	
C317	1-163-103-00	CERAMIC CHIP	27PF	5%	50V	

A

REF.NO.	PART NO.	DESCRIPTION		REMARK
C318	1-163-103-00	CERAMIC CHIP 27PF	5%	50V
C319	1-163-038-00	CERAMIC CHIP 0.1MF		25V
C320	1-124-477-11	ELECT 47MF	20%	16V
C321	1-163-038-00	CERAMIC CHIP 0.1MF		25V
C322	1-124-916-11	ELECT 22MF	20%	50V
C323	1-163-135-00	CERAMIC CHIP 560PF	5%	50V
C324	1-124-477-11	ELECT 47MF	20%	16V
C325	1-163-111-00	CERAMIC CHIP 56PF	5%	50V
C341	1-163-077-00	CERAMIC CHIP 0.1MF	10%	25V
C342	1-163-077-00	CERAMIC CHIP 0.1MF	10%	25V
C343	1-164-004-11	CERAMIC CHIP 0.1MF	10%	25V
C344	1-162-638-11	CERAMIC CHIP 1MF		16V
C345	1-164-346-11	CERAMIC CHIP 1MF		16V
C346	1-124-925-11	ELECT 2.2MF	20%	50V
C347	1-162-638-11	CERAMIC CHIP 1MF		16V
C348	1-164-346-11	CERAMIC CHIP 1MF		16V
C349	1-164-346-11	CERAMIC CHIP 1MF		16V
C350	1-124-907-11	ELECT 10MF	20%	50V
C351	1-124-443-00	ELECT 100MF	20%	10V
C353	1-164-346-11	CERAMIC CHIP 1MF		16V
C354	1-164-346-11	CERAMIC CHIP 1MF		16V
C355	1-162-638-11	CERAMIC CHIP 1MF		16V
C356	1-164-439-11	CERAMIC CHIP 0.22MF	10%	16V
C357	1-164-299-11	CERAMIC CHIP 0.22MF	10%	25V
C358	1-164-299-11	CERAMIC CHIP 0.22MF	10%	25V
C359	1-124-907-11	ELECT 10MF	20%	50V
C360	1-163-105-00	CERAMIC CHIP 33PF	5%	50V
C361	1-163-101-00	CERAMIC CHIP 22PF	5%	50V
C362	1-130-772-00	FILM 0.22MF	5%	63V
C363	1-124-907-11	ELECT 10MF	20%	50V
C365	1-124-120-11	ELECT 220MF	20%	16V
C366	1-124-903-11	ELECT 1MF	20%	50V
C369	1-163-117-00	CERAMIC CHIP 100PF	5%	50V
C401	1-164-005-11	CERAMIC CHIP 0.47MF		16V
C402	1-124-034-51	ELECT 33MF	20%	16V
C403	1-162-637-11	CERAMIC CHIP 0.47MF		16V
C411	1-164-005-11	CERAMIC CHIP 0.47MF		25V
C412	1-164-005-11	CERAMIC CHIP 0.47MF		25V
C421	1-124-477-11	ELECT 47MF	20%	16V
C422	1-124-477-11	ELECT 47MF	20%	16V
C423	1-101-004-00	CERAMIC 0.01MF		50V
C424	1-163-129-00	CERAMIC CHIP 330PF	5%	50V
C425	1-163-129-00	CERAMIC CHIP 330PF	5%	50V
C426	1-124-477-11	ELECT 47MF	20%	16V
C427	1-164-346-11	CERAMIC CHIP 1MF		16V
C428	1-164-346-11	CERAMIC CHIP 1MF		16V
C429	1-124-119-00	ELECT 330MF	20%	16V
C574	1-163-117-00	CERAMIC CHIP 100PF	5%	50V
C575	1-164-299-11	CERAMIC CHIP 0.22MF	10%	25V
C576	1-163-075-00	CERAMIC CHIP 0.047MF	10%	25V
C581	1-163-031-11	CERAMIC CHIP 0.01MF		50V
C582	1-124-916-11	ELECT 22MF	20%	50V
C583	1-163-133-00	CERAMIC CHIP 470PF	5%	50V
C585	1-163-009-11	CERAMIC CHIP 0.001MF	10%	50V
C586	1-163-063-00	CERAMIC CHIP 0.022MF	10%	50V
C587	1-124-903-11	ELECT 1MF	20%	50V
C588	1-164-346-11	CERAMIC CHIP 1MF		16V
C589	1-124-478-11	ELECT 100MF	20%	25V
C590	1-124-916-11	ELECT 22MF	20%	50V
C591	1-124-925-11	ELECT 2.2MF	20%	50V

REF.NO.	PART NO.	DESCRIPTION		REMARK
C592	1-163-017-00	CERAMIC CHIP 0.0047MF	10%	50V
C593	1-164-182-11	CERAMIC CHIP 0.0033MF	10%	50V
C595	1-163-109-00	CERAMIC CHIP 47PF	5%	50V
C599	1-164-232-11	CERAMIC CHIP 0.01MF	10%	50V
C644	1-124-916-11	ELECT 22MF	20%	50V
C681	1-124-478-11	ELECT 100MF	20%	25V
C682	1-126-516-11	ELECT 120MF	20%	16V
C683	1-124-478-11	ELECT 100MF	20%	25V
C685	1-124-478-11	ELECT 100MF	20%	25V
C686	1-163-038-00	CERAMIC CHIP 0.1MF		25V
C687	1-124-916-11	ELECT 22MF	20%	50V

< FILTER >

CF581	1-577-611-11	OSCILLATOR, CERAMIC

< CONNECTOR >

CN0001	*1-568-880-51	PIN, CONNECTOR 5P
CN0101	1-695-297-11	CONNECTOR,BOARD TO BOARD 20P (KV-X2973E,X2972U)
CN0103	1-564-511-11	PLUG, CONNECTOR 8P
CN0104	1-564-511-11	PLUG, CONNECTOR 8P
CN0105	*1-568-880-51	PIN, CONNECTOR 5P
CN0106	*1-568-880-51	PIN, CONNECTOR 5P
CN0107	*1-568-879-11	PIN, CONNECTOR 4P
CN0108	*1-568-878-51	PIN, CONNECTOR 3P
CN0109	1-695-299-11	CONNECTOR, BOARD TO BOARD 50P
CN0110	*1-568-882-51	PIN, CONNECTOR 7P
CN0113	1-695-298-11	CONNECTOR, BOARD TO BOARD 40P
CN0119	*1-568-879-11	PIN, CONNECTOR 4P
CN5108	*1-564-513-11	PLUG, CONNECTOR 10P

< DIODE >

D068	8-719-914-44	DIODE DAP202K
D069	8-719-914-44	DIODE DAP202K
D071	8-719-109-89	DIODE RD5.6ESB2
D073	8-719-109-89	DIODE RD5.6ESB2
D075	8-719-914-43	DIODE DAN202K
D077	8-719-914-43	DIODE DAN202K
D078	8-719-109-89	DIODE RD5.6ESB2
D079	8-719-109-89	DIODE RD5.6ESB2
D101	8-719-982-27	DIODE MTZJ-33C
D206	8-719-914-43	DIODE DAN202K
D207	8-719-921-89	DIODE MTZJ-13C
D208	8-719-901-33	DIODE 1SS133
D209	8-719-901-33	DIODE 1SS133
D210	8-719-901-33	DIODE 1SS133
D211	8-719-901-33	DIODE 1SS133
D212	8-719-901-33	DIODE 1SS133
D213	8-719-914-43	DIODE DAN202K
D214	8-719-914-42	DIODE DA204K
D301	8-719-914-43	DIODE DAN202K
D304	8-719-109-89	DIODE RD5.6ESB2
D305	8-719-914-43	DIODE DAN202K
D306	8-719-914-43	DIODE DAN202K
D307	8-719-914-43	DIODE DAN202K
D308	8-719-914-42	DIODE DA204K
D311	8-719-914-42	DIODE DA204K
D312	8-719-914-44	DIODE DAP202K
D313	8-719-914-43	DIODE DAN202K
D314	8-719-914-43	DIODE DAN202K

A

The components identified by shading and marked ! are critical for safety.
Replace only with the part number specified.

REF.NO.	PART NO.	DESCRIPTION	REMARK
D381	8-719-110-03	DIODE RD7.5ESB2	
D401	8-719-921-69	DIODE MTZJ9.1	
D403	8-719-921-69	DIODE MTZJ9.1	
D405	8-719-921-69	DIODE MTZJ9.1	
D406	8-719-921-69	DIODE MTZJ9.1	
D407	8-719-921-69	DIODE MTZJ9.1	
D571	8-719-914-42	DIODE DA204K	
D681	8-719-921-75	DIODE MTZN-10B	
D683	8-719-914-44	DIODE DAP202K	
		< IC >	
IC072	8-759-184-27	IC ST24C16CB1	
IC201	8-759-073-30	IC TDA6612 (KV-X2971A,X2971B,X2971D, X2973E,X2971K)	
	8-759-073-31	IC TDA6622 (KV-X2972U)	
IC202	8-759-502-21	IC TDA2822M	
IC251	8-759-072-99	IC TDA2052	
IC261	8-759-072-99	IC TDA2052	
IC301	8-759-189-90	IC TDA9145/N2B	
IC302	8-759-084-91	IC TDA4661/V2	
IC304	8-752-056-54	IC CXA1587S	
IC401	8-752-068-46	IC CXA1855S	
IC402	8-759-073-00	IC TEA2114	
IC681	8-759-072-98	IC TDA8138A	
IC684	8-759-701-59	IC NJM78M09FA	
IC685	8-759-510-52	IC TEA7605	
		< IF BLOCK >	
IFB101	1-466-733-11	IF BLOCK (IFH-389) (KV-X2971D,X2973E,X2971K, X2971A)	
	1-466-734-11	IF BLOCK (IFH-395) (KV-X2972U)	
	1-466-735-11	IF BLOCK (IFH-389F) (KV-X2971B)	
		< COIL >	
L101	1-412-546-41	INDUCTOR 560UH	
L102	1-408-413-00	INDUCTOR 22UH	
L201	1-407-500-00	INDUCTOR 4.7MMH	
L307	1-408-405-00	INDUCTOR 4.7UH	
L309	1-408-411-00	INDUCTOR 15UH	
L575	1-408-397-00	INDUCTOR 1UH	
L611	1-412-539-41	INDUCTOR 150UH	
L681	1-412-539-41	INDUCTOR 150UH	
		< IC LINK >	
PS681 !	1-532-605-91	LINK, IC 0.4A	
PS682 !	1-532-605-91	LINK, IC 0.4A	
		< TRANSISTOR >	
Q071	8-729-901-05	TRANSISTOR DTA124EK	
Q101	8-729-216-22	TRANSISTOR 2SA1162-G	
Q102	8-729-901-00	TRANSISTOR DTC124EK	
Q103	8-729-900-53	TRANSISTOR DTC114EK	
Q201	8-729-920-74	TRANSISTOR 2SC2412K-QR	
Q202	8-729-920-74	TRANSISTOR 2SC2412K-QR	
Q203	8-729-920-74	TRANSISTOR 2SC2412K-QR	
Q204	8-729-216-22	TRANSISTOR 2SA1162-G	
Q205	8-729-216-22	TRANSISTOR 2SA1162-G	
Q206	8-729-216-22	TRANSISTOR 2SA1162-G	
Q207	8-729-920-74	TRANSISTOR 2SC2412K-QR	
Q209	8-729-920-74	TRANSISTOR 2SC2412K-QR	
Q210	8-729-920-74	TRANSISTOR 2SC2412K-QR	
Q303	8-729-216-22	TRANSISTOR 2SA1162-G	
Q304	8-729-900-53	TRANSISTOR DTC114EK	
Q306	8-729-216-22	TRANSISTOR 2SA1162-G	
Q308	8-729-216-22	TRANSISTOR 2SA1162-G	
Q309	8-729-931-02	TRANSISTOR 2SC2413KQ	
Q311	8-729-901-06	TRANSISTOR DTA144EK	
Q312	8-729-900-53	TRANSISTOR DTC114EK	
Q313	8-729-216-22	TRANSISTOR 2SA1162-G	
Q314	8-729-920-74	TRANSISTOR 2SC2412K-QR	
Q315	8-729-920-74	TRANSISTOR 2SC2412K-QR	
Q316	8-729-901-01	TRANSISTOR DTC144EK	
Q317	8-729-920-74	TRANSISTOR 2SC2412K-QR	
Q401	8-729-920-74	TRANSISTOR 2SC2412K-QR	
Q402	8-729-920-74	TRANSISTOR 2SC2412K-QR	
Q403	8-729-920-74	TRANSISTOR 2SC2412K-QR	
Q581	8-729-920-74	TRANSISTOR 2SC2412K-QR	
Q582	8-729-216-22	TRANSISTOR 2SA1162-G	
Q583	8-729-920-74	TRANSISTOR 2SC2412K-QR	
Q610	8-729-140-97	TRANSISTOR 2SB734-34	
Q681	8-729-109-53	TRANSISTOR 2SD795A-P	
Q682	8-729-900-53	TRANSISTOR DTC114EK	
		< RESISTOR >	
JR102	1-216-295-00	METAL GLAZE 0 5% 1/10W	
JR104	1-216-295-00	METAL GLAZE 0 5% 1/10W	
JR107	1-216-295-00	METAL GLAZE 0 5% 1/10W	
JR109	1-216-295-00	METAL GLAZE 0 5% 1/10W	
JR110	1-216-295-00	METAL GLAZE 0 5% 1/10W	
JR111	1-216-295-00	METAL GLAZE 0 5% 1/10W	
JR112	1-216-295-00	METAL GLAZE 0 5% 1/10W	
JR113	1-216-295-00	METAL GLAZE 0 5% 1/10W	
JR114	1-216-295-00	METAL GLAZE 0 5% 1/10W	
JR115	1-216-295-00	METAL GLAZE 0 5% 1/10W	
JR116	1-216-295-00	METAL GLAZE 0 5% 1/10W	
JR117	1-216-295-00	METAL GLAZE 0 5% 1/10W	
JR118	1-216-295-00	METAL GLAZE 0 5% 1/10W	
JR119	1-216-295-00	METAL GLAZE 0 5% 1/10W	
JR120	1-216-295-00	METAL GLAZE 0 5% 1/10W	
JR121	1-216-295-00	METAL GLAZE 0 5% 1/10W	
JR122	1-216-295-00	METAL GLAZE 0 5% 1/10W	
JR123	1-216-295-00	METAL GLAZE 0 5% 1/10W	
JR125	1-216-295-00	METAL GLAZE 0 5% 1/10W	
JR126	1-216-295-00	METAL GLAZE 0 5% 1/10W	
JR127	1-216-295-00	METAL GLAZE 0 5% 1/10W	
JR128	1-216-295-00	METAL GLAZE 0 5% 1/10W	
JR129	1-216-295-00	METAL GLAZE 0 5% 1/10W	
JR130	1-216-295-00	METAL GLAZE 0 5% 1/10W	
JR131	1-216-295-00	METAL GLAZE 0 5% 1/10W	
JR132	1-216-295-00	METAL GLAZE 0 5% 1/10W	
JR133	1-216-295-00	METAL GLAZE 0 5% 1/10W	
JR134	1-216-295-00	METAL GLAZE 0 5% 1/10W	
JR135	1-216-295-00	METAL GLAZE 0 5% 1/10W	
JR136	1-216-295-00	METAL GLAZE 0 5% 1/10W	
JR137	1-216-295-00	METAL GLAZE 0 5% 1/10W	
JR138	1-216-296-00	METAL GLAZE 0 5% 1/8W	
JR139	1-216-295-00	METAL GLAZE 0 5% 1/10W	

A

REF.NO.	PART NO.	DESCRIPTION				REMARK
JR140	1-216-295-00	METAL GLAZE	0	5%	1/10W	
JR141	1-216-295-00	METAL GLAZE	0	5%	1/10W	
JR142	1-216-295-00	METAL GLAZE	0	5%	1/10W	
JR143	1-216-295-00	METAL GLAZE	0	5%	1/10W	
JR144	1-216-295-00	METAL GLAZE	0	5%	1/10W	
JR146	1-216-295-00	METAL GLAZE	0	5%	1/10W	
JR149	1-216-295-00	METAL GLAZE	0	5%	1/10W	
JR150	1-216-295-00	METAL GLAZE	0	5%	1/10W	
JR151	1-216-295-00	METAL GLAZE	0	5%	1/10W	
JR152	1-216-295-00	METAL GLAZE	0	5%	1/10W	
JR201	1-216-296-00	METAL GLAZE	0	5%	1/8W	
JR202	1-216-296-00	METAL GLAZE	0	5%	1/8W	
JR203	1-216-296-00	METAL GLAZE	0	5%	1/8W	
JR204	1-216-296-00	METAL GLAZE	0	5%	1/8W	
JR205	1-216-296-00	METAL GLAZE	0	5%	1/8W	
JR206	1-216-296-00	METAL GLAZE	0	5%	1/8W	
JR207	1-216-296-00	METAL GLAZE	0	5%	1/8W	
JR208	1-216-296-00	METAL GLAZE	0	5%	1/8W	
JR209	1-216-296-00	METAL GLAZE	0	5%	1/8W	
JR210	1-216-296-00	METAL GLAZE	0	5%	1/8W	
JR211	1-216-296-00	METAL GLAZE	0	5%	1/8W	
JR212	1-216-296-00	METAL GLAZE	0	5%	1/8W	
JR213	1-216-296-00	METAL GLAZE	0	5%	1/8W	
JR214	1-216-296-00	METAL GLAZE	0	5%	1/8W	
JR215	1-216-296-00	METAL GLAZE	0	5%	1/8W	
JR216	1-216-296-00	METAL GLAZE	0	5%	1/8W	
JR217	1-216-296-00	METAL GLAZE	0	5%	1/8W	
JR218	1-216-296-00	METAL GLAZE	0	5%	1/8W	
JR219	1-216-296-00	METAL GLAZE	0	5%	1/8W	
JR220	1-216-296-00	METAL GLAZE	0	5%	1/8W	
JR221	1-216-296-00	METAL GLAZE	0	5%	1/8W	
JR222	1-216-296-00	METAL GLAZE	0	5%	1/8W	
JR223	1-216-296-00	METAL GLAZE	0	5%	1/8W	
JR224	1-216-296-00	METAL GLAZE	0	5%	1/8W	
JR225	1-216-296-00	METAL GLAZE	0	5%	1/8W	
JR226	1-216-296-00	METAL GLAZE	0	5%	1/8W	
JR227	1-216-296-00	METAL GLAZE	0	5%	1/8W	
JR228	1-216-296-00	METAL GLAZE	0	5%	1/8W	
JR229	1-216-296-00	METAL GLAZE	0	5%	1/8W	
JR230	1-216-296-00	METAL GLAZE	0	5%	1/8W	
JR231	1-216-296-00	METAL GLAZE	0	5%	1/8W	
JR232	1-216-296-00	METAL GLAZE	0	5%	1/8W	
JR233	1-216-296-00	METAL GLAZE	0	5%	1/8W	
JR234	1-216-296-00	METAL GLAZE	0	5%	1/8W	
JR235	1-216-296-00	METAL GLAZE	0	5%	1/8W	
JR236	1-216-296-00	METAL GLAZE	0	5%	1/8W	
JR237	1-216-296-00	METAL GLAZE	0	5%	1/8W	
JR238	1-216-296-00	METAL GLAZE	0	5%	1/8W	
JR239	1-216-296-00	METAL GLAZE	0	5%	1/8W	
JR240	1-216-296-00	METAL GLAZE	0	5%	1/8W	
JR241	1-216-296-00	METAL GLAZE	0	5%	1/8W	
JR242	1-216-296-00	METAL GLAZE	0	5%	1/8W	
JR243	1-216-295-00	METAL GLAZE	0	5%	1/10W	
JR245	1-216-296-00	METAL GLAZE	0	5%	1/8W	
JR247	1-216-296-00	METAL GLAZE	0	5%	1/8W	
JR248	1-216-296-00	METAL GLAZE	0	5%	1/8W	
JR250	1-216-296-00	METAL GLAZE	0	5%	1/8W	
JR251	1-216-296-00	METAL GLAZE	0	5%	1/8W	
JR252	1-216-296-00	METAL GLAZE	0	5%	1/8W	
JR253	1-216-296-00	METAL GLAZE	0	5%	1/8W	

REF.NO.	PART NO.	DESCRIPTION				REMARK
JR254	1-216-296-00	METAL GLAZE	0	5%	1/8W	
JR255	1-216-296-00	METAL GLAZE	0	5%	1/8W	
JR257	1-216-296-00	METAL GLAZE	0	5%	1/8W	
JR272	1-216-295-00	METAL GLAZE	0	5%	1/10W	
R071	1-216-041-00	METAL GLAZE	470	5%	1/10W	
R072	1-216-033-00	METAL GLAZE	220	5%	1/10W	
R073	1-216-033-00	METAL GLAZE	220	5%	1/10W	
R074	1-216-198-91	METAL GLAZE	1K	5%	1/8W	
R076	1-216-057-00	METAL GLAZE	2.2K	5%	1/10W	
R077	1-216-025-00	METAL GLAZE	100	5%	1/10W	
R101	1-216-025-00	METAL GLAZE	100	5%	1/10W	
R102	1-216-049-00	METAL GLAZE	1K	5%	1/10W	
R103	1-216-059-00	METAL GLAZE	2.7K	5%	1/10W	
R105	1-216-073-00	METAL GLAZE	10K	5%	1/10W	
R108	1-216-230-00	METAL GLAZE	22K	5%	1/8W	
R115	1-216-210-00	METAL GLAZE	3.3K	5%	1/8W	
R201	1-216-653-11	METAL CHIP	1.2K	0.50%	1/10W	
R202	1-216-653-11	METAL CHIP	1.2K	0.50%	1/10W	
R203	1-216-067-00	METAL GLAZE	5.6K	5%	1/10W	
R204	1-216-091-00	METAL GLAZE	56K	5%	1/10W	
R205	1-216-071-00	METAL GLAZE	8.2K	5%	1/10W	
R206	1-216-071-00	METAL GLAZE	8.2K	5%	1/10W	
R207	1-216-057-00	METAL GLAZE	2.2K	5%	1/10W	
R208	1-216-057-00	METAL GLAZE	2.2K	5%	1/10W	
R209	1-249-377-11	CARBON	0.47	5%	1/4W	F
R210	1-247-734-11	CARBON	39	5%	1/2W	
R211	1-247-734-11	CARBON	39	5%	1/2W	
R212	1-216-049-00	METAL GLAZE	1K	5%	1/10W	
R213	1-216-073-00	METAL GLAZE	10K	5%	1/10W	
R214	1-216-049-00	METAL GLAZE	1K	5%	1/10W	
R215	1-216-073-00	METAL GLAZE	10K	5%	1/10W	
R216	1-216-049-00	METAL GLAZE	1K	5%	1/10W	
R217	1-216-045-00	METAL GLAZE	680	5%	1/10W	
R218	1-216-081-00	METAL GLAZE	22K	5%	1/10W	
R221	1-212-849-00	FUSIBLE	4.7	5%	1/4W	F
R222	1-216-049-00	METAL GLAZE	1K	5%	1/10W	
R223	1-216-045-00	METAL GLAZE	680	5%	1/10W	
R224	1-249-433-11	CARBON	22K	5%	1/4W	
R225	1-212-849-00	FUSIBLE	4.7	5%	1/4W	F
R226	1-249-412-11	CARBON	390	5%	1/4W	
R227	1-216-081-00	METAL GLAZE	22K	5%	1/10W	
R228	1-216-081-00	METAL GLAZE	22K	5%	1/10W	
R229	1-216-039-00	METAL GLAZE	390	5%	1/10W	
R230	1-216-246-91	METAL GLAZE	100K	5%	1/8W	
R231	1-216-097-00	METAL GLAZE	100K	5%	1/10W	
R232	1-216-081-00	METAL GLAZE	22K	5%	1/10W	
R233	1-216-071-00	METAL GLAZE	8.2K	5%	1/10W	
R234	1-216-077-00	METAL GLAZE	15K	5%	1/10W	
R235	1-216-073-00	METAL GLAZE	10K	5%	1/10W	
R236	1-216-081-00	METAL GLAZE	22K	5%	1/10W	
R237	1-216-025-00	METAL GLAZE	100	5%	1/10W	
R238	1-216-025-00	METAL GLAZE	100	5%	1/10W	
R241	1-216-065-00	METAL GLAZE	4.7K	5%	1/10W	
R242	1-216-214-00	METAL GLAZE	4.7K	5%	1/8W	
R244	1-216-069-00	METAL GLAZE	6.8K	5%	1/10W	
R245	1-216-089-91	METAL GLAZE	47K	5%	1/10W	
R246	1-216-097-00	METAL GLAZE	100K	5%	1/10W	
R247	1-216-073-00	METAL GLAZE	10K	5%	1/10W	
R248	1-216-073-00	METAL GLAZE	10K	5%	1/10W	

A

REF.NO.	PART NO.	DESCRIPTION				REMARK
R249	1-216-045-00	METAL GLAZE	680	5%	1/10W	
R250	1-216-095-00	METAL GLAZE	82K	5%	1/10W	
R251	1-216-065-00	METAL GLAZE	4.7K	5%	1/10W	
R252	1-216-073-00	METAL GLAZE	10K	5%	1/10W	
R253	1-216-073-00	METAL GLAZE	10K	5%	1/10W	
R254	1-216-252-00	METAL GLAZE	180K	5%	1/8W	
R255	1-216-252-00	METAL GLAZE	180K	5%	1/8W	
R256	1-249-409-11	CARBON	220	5%	1/4W	
R257	1-249-409-11	CARBON	220	5%	1/4W	
R258	1-216-089-91	METAL GLAZE	47K	5%	1/10W	
R259	1-216-063-00	METAL GLAZE	3.9K	5%	1/10W	
R260	1-216-212-00	METAL GLAZE	3.9K	5%	1/8W	
R301	1-216-041-00	METAL GLAZE	470	5%	1/10W	
R302	1-216-041-00	METAL GLAZE	470	5%	1/10W	
R303	1-216-174-00	METAL GLAZE	100	5%	1/8W	
R304	1-216-174-00	METAL GLAZE	100	5%	1/8W	
R305	1-216-035-00	METAL GLAZE	270	5%	1/10W	
R306	1-216-035-00	METAL GLAZE	270	5%	1/10W	
R307	1-216-075-00	METAL GLAZE	12K	5%	1/10W	
R308	1-216-121-00	METAL GLAZE	1M	5%	1/10W	
R309	1-216-001-00	METAL GLAZE	10	5%	1/10W	
R310	1-216-001-00	METAL GLAZE	10	5%	1/10W	
R311	1-216-065-00	METAL GLAZE	4.7K	5%	1/10W	
R312	1-249-413-11	CARBON	470	5%	1/4W	
R313	1-216-081-00	METAL GLAZE	22K	5%	1/10W	
R314	1-249-409-11	CARBON	220	5%	1/4W	
R315	1-249-409-11	CARBON	220	5%	1/4W	
R316	1-216-085-00	METAL GLAZE	33K	5%	1/10W	
R318	1-216-041-00	METAL GLAZE	470	5%	1/10W	
R319	1-249-413-11	CARBON	470	5%	1/4W	
R322	1-216-041-00	METAL GLAZE	470	5%	1/10W	
R323	1-216-295-00	METAL GLAZE	0	5%	1/10W	
R324	1-216-049-00	METAL GLAZE	1K	5%	1/10W	
R325	1-216-041-00	METAL GLAZE	470	5%	1/10W	
R328	1-216-025-00	METAL GLAZE	100	5%	1/10W	
R329	1-216-023-00	METAL GLAZE	82	5%	1/10W	
R330	1-216-053-00	METAL GLAZE	1.5K	5%	1/10W	
R331	1-216-097-00	METAL GLAZE	100K	5%	1/10W	
R332	1-216-182-91	METAL GLAZE	220	5%	1/8W	
R333	1-216-182-91	METAL GLAZE	220	5%	1/8W	
R334	1-216-182-91	METAL GLAZE	220	5%	1/8W	
R336	1-216-029-00	METAL GLAZE	150	5%	1/10W	
R337	1-216-041-00	METAL GLAZE	470	5%	1/10W	
R338	1-216-035-00	METAL GLAZE	270	5%	1/10W	
R339	1-216-025-00	METAL GLAZE	100	5%	1/10W	
R340	1-216-025-00	METAL GLAZE	100	5%	1/10W	
R341	1-216-025-00	METAL GLAZE	100	5%	1/10W	
R342	1-216-033-00	METAL GLAZE	220	5%	1/10W	
R343	1-216-022-00	METAL GLAZE	75	5%	1/10W	
R344	1-216-022-00	METAL GLAZE	75	5%	1/10W	
R345	1-216-171-00	METAL GLAZE	75	5%	1/8W	
R346	1-216-022-00	METAL GLAZE	75	5%	1/10W	
R347	1-216-083-00	METAL GLAZE	27K	5%	1/10W	
R351	1-216-073-00	METAL GLAZE	10K	5%	1/10W	
R352	1-216-033-00	METAL GLAZE	220	5%	1/10W	
R354	1-216-033-00	METAL GLAZE	220	5%	1/10W	
R355	1-216-033-00	METAL GLAZE	220	5%	1/10W	
R356	1-216-033-00	METAL GLAZE	220	5%	1/10W	
R357	1-216-041-00	METAL GLAZE	470	5%	1/10W	
R358	1-216-031-00	METAL GLAZE	180	5%	1/10W	
R359	1-216-033-00	METAL GLAZE	220	5%	1/10W	
R360	1-216-033-00	METAL GLAZE	220	5%	1/10W	
R361	1-216-033-00	METAL GLAZE	220	5%	1/10W	
R362	1-216-077-00	METAL GLAZE	15K	5%	1/10W	
R366	1-216-236-11	METAL GLAZE	39K	5%	1/8W	
R376	1-216-065-00	METAL GLAZE	4.7K	5%	1/10W	
R377	1-216-051-00	METAL GLAZE	1.2K	5%	1/10W	
R378	1-216-057-00	METAL GLAZE	2.2K	5%	1/10W	
R379	1-216-206-00	METAL GLAZE	2.2K	5%	1/8W	
R380	1-216-057-00	METAL GLAZE	2.2K	5%	1/10W	
R381	1-216-164-00	METAL GLAZE	39	5%	1/8W	
R382	1-216-164-00	METAL GLAZE	39	5%	1/8W	
R383	1-216-164-00	METAL GLAZE	39	5%	1/8W	
R385	1-216-085-00	METAL GLAZE	33K	5%	1/10W	
R386	1-216-073-00	METAL GLAZE	10K	5%	1/10W	
R387	1-216-065-00	METAL GLAZE	4.7K	5%	1/10W	
R388	1-216-073-00	METAL GLAZE	10K	5%	1/10W	
R389	1-216-071-00	METAL GLAZE	8.2K	5%	1/10W	
R390	1-216-083-00	METAL GLAZE	27K	5%	1/10W	
R391	1-216-069-00	METAL GLAZE	6.8K	5%	1/10W	
R392	1-216-061-00	METAL GLAZE	3.3K	5%	1/10W	
R393	1-216-073-00	METAL GLAZE	10K	5%	1/10W	
R394	1-216-081-00	METAL GLAZE	22K	5%	1/10W	
R395	1-216-097-00	METAL GLAZE	100K	5%	1/10W	
R396	1-216-081-00	METAL GLAZE	22K	5%	1/10W	
R401	1-216-171-00	METAL GLAZE	75	5%	1/8W	
R402	1-216-158-00	METAL GLAZE	22	5%	1/8W	
R403	1-216-025-00	METAL GLAZE	100	5%	1/10W	
R404	1-216-158-00	METAL GLAZE	22	5%	1/8W	
R405	1-216-025-00	METAL GLAZE	100	5%	1/10W	
R406	1-216-158-00	METAL GLAZE	22	5%	1/8W	
R407	1-216-025-00	METAL GLAZE	100	5%	1/10W	
R408	1-216-093-00	METAL GLAZE	68K	5%	1/10W	
R410	1-216-067-00	METAL GLAZE	5.6K	5%	1/10W	
R411	1-216-067-00	METAL GLAZE	5.6K	5%	1/10W	
R412	1-216-022-00	METAL GLAZE	75	5%	1/10W	
R413	1-216-022-00	METAL GLAZE	75	5%	1/10W	
R414	1-216-022-00	METAL GLAZE	75	5%	1/10W	
R416	1-216-113-00	METAL GLAZE	470K	5%	1/10W	
R417	1-216-067-00	METAL GLAZE	5.6K	5%	1/10W	
R419	1-216-113-00	METAL GLAZE	470K	5%	1/10W	
R420	1-216-067-00	METAL GLAZE	5.6K	5%	1/10W	
R424	1-216-025-00	METAL GLAZE	100	5%	1/10W	
R425	1-216-025-00	METAL GLAZE	100	5%	1/10W	
R428	1-249-393-11	CARBON	10	5%	1/4W	F
R574	1-216-041-00	METAL GLAZE	470	5%	1/10W	
R575	1-216-186-00	METAL GLAZE	330	5%	1/8W	
R577	1-216-089-91	METAL GLAZE	47K	5%	1/10W	
R578	1-216-238-91	METAL GLAZE	47K	5%	1/8W	
R580	1-216-049-00	METAL GLAZE	1K	5%	1/10W	
R581	1-216-033-00	METAL GLAZE	220	5%	1/10W	
R582	1-216-037-00	METAL GLAZE	330	5%	1/10W	
R583	1-216-053-00	METAL GLAZE	1.5K	5%	1/10W	
R584	1-216-039-00	METAL GLAZE	390	5%	1/10W	
R585	1-216-067-00	METAL GLAZE	5.6K	5%	1/10W	
R586	1-216-047-00	METAL GLAZE	820	5%	1/10W	
R587	1-216-047-00	METAL GLAZE	820	5%	1/10W	
R588	1-216-101-00	METAL GLAZE	150K	5%	1/10W	
R589	1-216-073-00	METAL GLAZE	10K	5%	1/10W	
R590	1-216-049-00	METAL GLAZE	1K	5%	1/10W	

A IF (KV-X2971A/X2971D/ KV-X2973E/X2971K)

REF.NO.	PART NO.	DESCRIPTION				REMARK
R591	1-216-073-00	METAL GLAZE	10K	5%	1/10W	
R592	1-216-232-00	METAL GLAZE	27K	5%	1/8W	
R593	1-216-071-00	METAL GLAZE	8.2K	5%	1/10W	
R594	1-216-061-00	METAL GLAZE	3.3K	5%	1/10W	
R595	1-216-643-11	METAL CHIP	470	0.50%	1/10W	
R596	1-216-067-00	METAL GLAZE	5.6K	5%	1/10W	
R597	1-216-230-00	METAL GLAZE	22K	5%	1/8W	
R598	1-216-053-00	METAL GLAZE	1.5K	5%	1/10W	
R600	1-216-174-00	METAL GLAZE	100	5%	1/8W	
R616	1-216-184-00	METAL GLAZE	270	5%	1/8W	
R619	1-216-077-00	METAL GLAZE	15K	5%	1/10W	
R628	1-249-413-11	CARBON	470	5%	1/4W	
R632	1-216-065-00	METAL GLAZE	4.7K	5%	1/10W	
R681	1-216-541-00	METAL OXIDE	4.3	5%	3W	F
R682	1-249-415-11	CARBON	680	5%	1/4W	
R683	1-216-073-00	METAL GLAZE	10K	5%	1/10W	
R2219	1-216-174-00	METAL GLAZE	100	5%	1/8W	
R2220	1-216-174-00	METAL GLAZE	100	5%	1/8W	
R2221	1-216-174-00	METAL GLAZE	100	5%	1/8W	
R2222	1-216-174-00	METAL GLAZE	100	5%	1/8W	

< TUNER >

TU101	1-693-185-11	TUNER (UV-916H) (KV-X2971A,X2971B,X2971D, X2973E,X2971K)
	1-693-184-11	TUNER (U944C) (KV-X2972U)

< CRYSTAL >

X301	1-567-504-11	OSCILLATOR, CRYSTAL
X302	1-567-505-11	OSCILLATOR, CRYSTAL

****

1-466-733-11 IF BLOCK (IFH-389) (KV-X2971A,X2971D, ********** X2971K,X2973E)

< CAPACITOR >

REF.NO.	PART NO.	DESCRIPTION			REMARK
C101	1-163-121-00	CERAMIC CHIP 150PF		5%	50V
C102	1-164-222-11	CERAMIC CHIP 0.22MF			25V
C103	1-164-232-11	CERAMIC CHIP 0.01MF		10%	50V
C104	1-164-232-11	CERAMIC CHIP 0.01F		10%	50V
C105	1-164-004-11	CERAMIC CHIP 0.1MF		10%	25V
C106	1-124-477-11	ELECT	47MF	20%	16V
C107	1-164-004-11	CERAMIC CHIP 0.1MF		10%	25V
C108	1-164-004-11	CERAMIC CHIP 0.1MF		10%	25V
C109	1-164-232-11	CERAMIC CHIP 0.01F		10%	50V
C112	1-164-004-11	CERAMIC CHIP 0.1MF		10%	25V
C113	1-164-101-00	CERAMIC CHIP 22PF		5%	50V
C114	1-124-477-11	ELECT	47MF	20%	16V
C115	1-164-232-11	CERAMIC CHIP 0.01F		10%	50V
C116	1-164-346-11	CERAMIC CHIP 1MF			16V
C118	1-164-004-11	CERAMIC CHIP 0.1MF		10%	25V
C119	1-163-369-11	CERAMIC CHIP 47PFF		5%	25V
C121	1-163-235-11	CERAMOC CHIP 22PF		5%	50V
C122	1-164-239-11	CERAMIC CHIP 33PF		5%	50V
C123	1-163-235-11	CERAMIC CHIP 22PF		5%	50V
C124	1-164-004-11	CERAMIC CHIP 0.1MF		10%	25V
C130	1-216-295-00	METAL GLAZE	0	5%	1/10W
C131	1-163-093-00	CERAMIC CHIP 10PF		5%	50V
C133	1-124-477-11	ELECT	47MF	20%	16V
C152	1-164-337-11	CERAMIC CHIP 2.2MF			16V
C153	1-164-337-11	CERAMIC CHIP 2.2MF			16V
C154	1-164-337-11	CERAMIC CHIP 2.2MF			16V
C155	1-164-232-11	CERAMIC CHIP 0.01F		10%	50V
C156	1-124-477-11	ELECT	47MF	20%	16V
C161	1-164-117-00	CERAMIC CHIP 100PF		5%	50V
C162	1-164-222-11	CERAMIC CHIP 0.22MF			25V
C163	1-164-346-11	CERAMIC CHIP 1MF			16V
C164	1-163-141-00	CERAMIC CHIP 0.001MF		5%	50V
C165	1-164-232-11	CERAMIC CHIP 0.01F		10%	50V
C166	1-124-477-11	ELECT	47MF	20%	16V
C167	1-163-213-00	CERAMIC CHIP 0.0022MF		5%	50V
C168	1-164-346-11	CERAMIC CHIP 1MF			16V
C170	1-124-477-11	ELECT	47MF	20%	16V
C171	1-124-477-11	ELECT	47MF	20%	16V
C173	1-124-477-11	ELECT	47MF	20%	16V

< FILTER >

CF2	1-527-839-00	FILTER, CERAMIC
CF3	1-527-840-00	FILTER, CERAMIC
CF4	1-567-570-00	FILTER, CERAMIC
SWF1	1-579-658-11	FILTER, SAWTOOTH WAVE

< CONNECTOR >

CN1	1-750-173-11	PIN, CONNECTOR (PC BOARD) 10P
CN2	1-750-173-11	PIN, CONNECTOR (PC BOARD) 10P

< TRIMMER >

CT1	1-404-801-11	TRAP, CERAMIC

< DIODE >

D161	8-719-400-18	DIODE MA152WK

< IC >

IC1	8-759-070-76	IC M52308SP
IC2	8-759-070-71	IC TDA9820
IC3	8-759-514-54	IC BA7046

< COIL >

L101	1-408-421-00	INDUCTOR	100UH
L102	1-408-419-00	INDUCTOR	68UH
L103	1-408-419-00	INDUCTOR	68UH
L104	1-408-408-00	INDUCTOR	8.2UH
L121	1-408-413-00	INDUCTOR	22UH
L122	1-408-420-00	INDUCTOR	82UH
L142	1-408-790-00	INDUCTOR	0.56UH
L151	1-408-419-00	INDUCTOR	68UH
L161	1-408-419-00	INDUCTOR	68UH

< TRANSISTOR >

Q101	8-729-920-74	TRANSISTOR 2SC2412K-QR
Q102	8-729-216-22	TRANSISTOR 2SA1162-G
Q121	8-729-920-74	TRANSISTOR 2SC2412K-QR
Q122	8-729-216-22	TRANSISTOR 2SA1162-G
Q161	8-729-216-22	TRANSISTOR 2SA1162-G
Q170	8-729-920-74	TRANSISTOR 2SC2412K-QR
Q171	8-729-920-74	TRANSISTOR 2SC2412K-QR
Q172	8-729-920-74	TRANSISTOR 2SC2412K-QR
Q173	8-729-920-74	TRANSISTOR 2SC2412K-QR

< RESISTOR >

JR2	1-216-295-00	METAL GLAZE	0	5%	1/10W

IF (KV-X2971A/X2971D/ KV-X2973E/X2971K)

REF.NO.	PART NO.	DESCRIPTION			REMARK
JR3	1-216-296-00	METAL GLAZE	0	5%	1/8W
JR4	1-216-295-00	METAL GLAZE	0	5%	1/10W
JR7	1-216-295-00	METAL GLAZE	0	5%	1/10W
JR8	1-216-295-00	METAL GLAZE	0	5%	1/10W
JR9	1-216-296-00	METAL GLAZE	0	5%	1/8W
JR11	1-216-296-00	METAL GLAZE	0	5%	1/8W
JR14	1-216-296-00	METAL GLAZE	0	5%	1/8W
JR16	1-216-295-00	METAL GLAZE	0	5%	1/10W
JR18	1-216-295-00	METAL GLAZE	0	5%	1/10W
JR19	1-216-296-00	METAL GLAZE	0	5%	1/8W
JR20	1-216-296-00	METAL GLAZE	0	5%	1/8W
JR21	1-216-296-00	METAL GLAZE	0	5%	1/8W
JR23	1-216-296-00	METAL GLAZE	0	5%	1/8W
JR24	1-216-296-00	METAL GLAZE	0	5%	1/8W
JR25	1-216-296-00	METAL GLAZE	0	5%	1/8W
JR29	1-216-296-00	METAL GLAZE	0	5%	1/8W
JR30	1-216-295-00	METAL GLAZE	0	5%	1/10W
JR33	1-216-295-00	METAL GLAZE	0	5%	1/10W
JR38	1-216-296-00	METAL GLAZE	0	5%	1/8W
JR39	1-216-296-00	METAL GLAZE	0	5%	1/8W
JR40	1-216-296-00	METAL GLAZE	0	5%	1/8
R101	1-216-075-00	METAL GLAZE	12K	5%	1/10W
R102	1-216-073-00	METAL GLAZE	10K	5%	1/10W
R103	1-216-057-00	METAL GLAZE	2.2K	5%	1/10W
R104	1-216-051-00	METAL GLAZE	1.2K	5%	1/10W
R106	1-216-049-00	METAL GLAZE	1K	5%	1/10W
R107	1-216-065-00	METAL GLAZE	4.7K	5%	1/10W
R108	1-216-065-00	METAL GLAZE	4.7K	5%	1/10W
R110	1-216-041-00	METAL GLAZE	470	5%	1/10W
R113	1-216-031-00	METAL GLAZE	180	5%	1/10W
R114	1-216-049-00	METAL GLAZE	1K	5%	1/10W
R115	1-216-027-00	METAL GLAZE	120	5%	1/10W
R116	1-216-101-00	METAL GLAZE	150K	5%	1/10W
R117	1-216-097-00	METAL GLAZE	100K	5%	1/10W
R118	1-216-117-00	METAL GLAZE	680K	5%	1/10W
R119	1-216-240-00	METAL GLAZE	56K	5%	1/8W
R120	1-216-075-00	METAL GLAZE	12K	5%	1/10W
R121	1-216-053-00	METAL GLAZE	1.5K	5%	1/10W
R122	1-216-061-00	METAL GLAZE	3.3K	5%	1/10W
R123	1-216-075-00	METAL GLAZE	12K	5%	1/10W
R124	1-216-041-00	METAL GLAZE	470	5%	1/10W
R125	1-216-041-00	METAL GLAZE	470	5%	1/10W
R127	1-216-047-00	METAL GLAZE	820	5%	1/10W
R130	1-216-049-00	METAL GLAZE	1K	5%	1/10W
R131	1-216-025-00	METAL GLAZE	100	5%	1/10W
R132	1-216-069-00	METAL GLAZE	6.8K	5%	1/10W
R133	1-216-061-00	METAL GLAZE	3.3K	5%	1/10W
R134	1-216-049-00	METAL GLAZE	1K	5%	1/10W
R135	1-216-198-00	METAL GLAZE	1K	5%	1/8W
R150	1-216-043-00	METAL GLAZE	560	5%	1/10W
R151	1-216-043-00	METAL GLAZE	560	5%	1/10W
R152	1-216-043-00	METAL GLAZE	560	5%	1/10W
R153	1-216-025-00	METAL GLAZE	100	5%	1/10W
R154	1-216-049-00	METAL GLAZE	1K	5%	1/10W
R155	1-216-051-00	METAL GLAZE	1.2K	5%	1/10W
R156	1-216-083-00	METAL GLAZE	27K	5%	1/10W
R157	1-216-051-00	METAL GLAZE	1.2K	5%	1/10W
R159	1-216-107-00	METAL GLAZE	270K	5%	1/10W
R160	1-216-049-00	METAL GLAZE	1K	5%	1/10W
R161	1-216-755-11	METAL CHIP	130K	0.50%	1/10W

IF (KV-X2972U)

REF.NO.	PART NO.	DESCRIPTION			REMARK
R162	1-216-073-00	METAL GLAZE	10K	5%	1/10W
R163	1-216-113-00	METAL GLAZE	470K	5%	1/10W
R164	1-216-113-00	METAL GLAZE	470K	5%	1/10W
R165	1-216-081-00	METAL GLAZE	22K	5%	1/10W
R166	1-216-049-00	METAL GLAZE	1K	5%	1/10W
R167	1-216-073-00	METAL GLAZE	10K	5%	1/10W
R168	1-216-113-00	METAL GLAZE	470K	5%	1/10W
R169	1-216-049-00	METAL GLAZE	1K	5%	1/10W
R170	1-216-083-00	METAL GLAZE	27K	5%	1/10W
R171	1-216-075-00	METAL GLAZE	12K	5%	1/10W
R172	1-216-095-00	METAL GLAZE	82K	5%	1/10W
R173	1-216-059-00	METAL GLAZE	2.7K	5%	1/10W
R174	1-216-057-00	METAL GLAZE	2.2K	5%	1/10W
R175	1-216-083-00	METAL GLAZE	27K	5%	1/10W
R176	1-216-075-00	METAL GLAZE	12K	5%	1/10W
R177	1-216-095-00	METAL GLAZE	82K	5%	1/10W
R178	1-216-059-00	METAL GLAZE	2.7K	5%	1/10W
R179	1-216-057-00	METAL GLAZE	2.2K	5%	1/10W
R180	1-216-037-00	METAL GLAZE	330	5%	1/10W
R181	1-216-037-00	METAL GLAZE	330	5%	1/10W

< VARIABLE RESISTOR >

RV1	**1-241-121-11**	RES, ADJ, CARBON 4.7K

< TRANSFORMER >

T4	1-416-017-21	COIL
T5	1-416-018-21	COIL

****

1-466-734-11 IF BLOCK (IFH-395) (KV-X2972U)
****

< CAPACITOR >

C101	1-163-239-11	CERAMIC CHIP 33PF	5%	50V
C102	1-164-222-11	CERAMIC CHIP 0.22MF		25V
C103	1-164-232-11	CERAMIC CHIP 0.01MF	10%	50V
C104	1-164-232-11	CERAMIC CHIP 0.01F	10%	50V
C105	1-164-004-11	CERAMIC CHIP 0.1MF	10%	25V
C106	1-124-477-11	ELECT 47MF	20%	16V
C107	1-164-004-11	CERAMIC CHIP 0.1MF	10%	25V
C108	1-164-004-11	CERAMIC CHIP 0.1MF	10%	25V
C109	1-164-232-11	CERAMIC CHIP 0.01F	10%	50V
C112	1-164-004-11	CERAMIC CHIP 0.1MF	10%	25V
C113	1-164-101-00	CERAMIC CHIP 22PF	5%	50V
C114	1-124-477-11	ELECT 47MF	20%	16V
C115	1-164-232-11	CERAMIC CHIP 0.01F	10%	50V
C116	1-164-346-11	CERAMIC CHIP 1MF		16V
C118	1-164-004-11	CERAMIC CHIP 0.1MF	10%	25V
C119	1-163-369-11	CERAMIC CHIP 47PFF	5%	25V
C122	1-163-093-11	CERAMIC CHIP 10PF	5%	50V
C130	1-216-295-00	METAL GLAZE 0	5%	1/10W
C131	1-163-224-11	CERAMIC CHIP 7PF	0.25PF	50V
C133	1-124-477-11	ELECT 47MF	20%	16V
C161	1-164-117-00	CERAMIC CHIP 100PF	5%	50V
C162	1-164-222-11	CERAMIC CHIP 0.22MF		25V
C163	1-164-346-11	CERAMIC CHIP 1MF		16V
C164	1-163-141-00	CERAMIC CHIP 0.001MF	5%	50V
C165	1-164-232-11	CERAMIC CHIP 0.01F	10%	50V
C166	1-124-477-11	ELECT 47MF	20%	16V

IF (KV-X2972U)

REF.NO.	PART NO.	DESCRIPTION			REMARK
C167	1-163-213-00	CERAMIC CHIP 0.0022MF		5%	50V
C168	1-164-346-11	CERAMIC CHIP 1MF			16V
C170	1-124-477-11	ELECT	47MF	20%	16V
C171	1-124-477-11	ELECT	47MF	20%	16V
C173	1-124-477-11	ELECT	47MF	20%	16V
		< FILTER >			
CD1	1-579-657-21	DISCRIMINATOR, CERAMIC			
CF1	1-567-569-11	FILTER, CERAMIC			
SWF1	1-579-659-11	FILTER, SAWTOOTH WAVE			
		< CONNECTOR >			
CN1	1-750-173-11	PIN, CONNECTOR (PC BOARD) 10P			
CN2	1-750-173-11	PIN, CONNECTOR (PC BOARD) 10P			
		< TRIMMER >			
CT1	1-409-333-00	TRAP, CERAMIC (6.0MHZ)			
		< DIODE >			
D161	8-719-400-18	DIODE MA152WK			
		< IC >			
IC1	8-759-070-76	IC M52308SP			
IC3	8-759-514-54	IC BA7046			
		< COIL >			
L101	1-408-414-00	INDUCTOR	27UH		
L102	1-408-419-00	INDUCTOR	68UH		
L103	1-408-419-00	INDUCTOR	68UH		
L104	1-408-406-00	INDUCTOR	5.6UH		
L105	1-408-410-00	INDUCTOR	12UH		
L142	1-408-790-41	INDUCTOR	0.56UH		
L161	1-408-419-00	INDUCTOR	68UH		
		< TRANSISTOR >			
Q101	8-729-920-74	TRANSISTOR 2SC2412K-QR			
Q102	8-729-216-22	TRANSISTOR 2SA1162-G			
Q122	8-729-216-22	TRANSISTOR 2SA1162-G			
Q161	8-729-216-22	TRANSISTOR 2SA1162-G			
Q172	8-729-920-74	TRANSISTOR 2SC2412K-QR			
Q173	8-729-920-74	TRANSISTOR 2SC2412K-QR			
		< RESISTOR >			
JR1	1-216-296-00	METAL GLAZE	0	5%	1/8W
JR2	1-216-295-00	METAL GLAZE	0	5%	1/10W
JR3	1-216-296-00	METAL GLAZE	0	5%	1/8W
JR4	1-216-295-00	METAL GLAZE	0	5%	1/10W
JR7	1-216-295-00	METAL GLAZE	0	5%	1/10W
JR8	1-216-295-00	METAL GLAZE	0	5%	1/10W
JR9	1-216-296-00	METAL GLAZE	0	5%	1/8W
JR10	1-216-296-00	METAL GLAZE	0	5%	1/8W
JR11	1-216-296-00	METAL GLAZE	0	5%	1/8W
JR12	1-216-296-00	METAL GLAZE	0	5%	1/8W
JR13	1-163-093-00	CERAMIC CHIP	10PF	5%	50V
JR14	1-216-296-00	METAL GLAZE	0	5%	1/8W
JR16	1-216-295-00	METAL GLAZE	0	5%	1/10W
JR18	1-216-295-00	METAL GLAZE	0	5%	1/10W
JR19	1-216-296-00	METAL GLAZE	0	5%	1/8W

REF.NO.	PART NO.	DESCRIPTION			REMARK
JR20	1-216-296-00	METAL GLAZE	0	5%	1/8W
JR21	1-216-296-00	METAL GLAZE	0	5%	1/8W
JR23	1-216-296-00	METAL GLAZE	0	5%	1/8W
JR24	1-216-296-00	METAL GLAZE	0	5%	1/8W
JR25	1-216-296-00	METAL GLAZE	0	5%	1/8W
JR29	1-216-296-00	METAL GLAZE	0	5%	1/8W
JR30	1-216-295-00	METAL GLAZE	0	5%	1/10W
JR33	1-216-295-00	METAL GLAZE	0	5%	1/10W
JR38	1-216-296-00	METAL GLAZE	0	5%	1/8W
JR39	1-216-296-00	METAL GLAZE	0	5%	1/8W
JR40	1-216-296-00	METAL GLAZE	0	5%	1/8W
JR41	1-216-295-00	METAL GLAZE	0	5%	1/10W
JR42	1-216-295-00	METAL GLAZE	0	5%	1/10W
JR101	1-216-295-00	METAL GLAZE	0	5%	1/10W
R101	1-216-075-00	METAL GLAZE	12K	5%	1/10W
R102	1-216-045-00	METAL GLAZE	680	5%	1/10W
R103	1-216-057-00	METAL GLAZE	2.2K	5%	1/10W
R104	1-216-051-00	METAL GLAZE	1.2K	5%	1/10W
R105	1-216-043-00	METAL GLAZE	560	5%	1/10W
R106	1-216-049-00	METAL GLAZE	1K	5%	1/10W
R107	1-216-065-00	METAL GLAZE	4.7K	5%	1/10W
R108	1-216-065-00	METAL GLAZE	4.7K	5%	1/10W
R110	1-216-041-00	METAL GLAZE	470	5%	1/10W
R112	1-216-045-00	METAL GLAZE	680	5%	1/10W
R113	1-216-031-00	METAL GLAZE	180	5%	1/10W
R114	1-216-049-00	METAL GLAZE	1K	5%	1/10W
R115	1-216-031-00	METAL GLAZE	180	5%	1/10W
R116	1-216-101-00	METAL GLAZE	150K	5%	1/10W
R117	1-216-097-00	METAL GLAZE	100K	5%	1/10W
R118	1-216-117-00	METAL GLAZE	680K	5%	1/10W
R119	1-216-240-00	METAL GLAZE	56K	5%	1/8W
R120	1-216-075-00	METAL GLAZE	12K	5%	1/10W
R121	1-216-053-00	METAL GLAZE	1.5K	5%	1/10W
R122	1-216-061-00	METAL GLAZE	3.3K	5%	1/10W
R123	1-216-061-00	METAL GLAZE	3.3K	5%	1/10W
R130	1-216-049-00	METAL GLAZE	1K	5%	1/10W
R131	1-216-025-00	METAL GLAZE	100	5%	1/10W
R132	1-216-059-00	METAL GLAZE	6.8K	5%	1/10W
R133	1-216-061-00	METAL GLAZE	3.3K	5%	1/10W
R134	1-216-049-00	METAL GLAZE	1K	5%	1/10W
R135	1-216-198-00	METAL GLAZE	1K	5%	1/8W
R153	1-216-025-00	METAL GLAZE	100	5%	1/10W
R159	1-216-107-00	METAL GLAZE	270K	5%	1/10W
R160	1-216-049-00	METAL GLAZE	1K	5%	1/10W
R161	1-216-755-11	METAL CHIP	130K	0.50%	1/10W
R162	1-216-073-00	METAL GLAZE	10K	5%	1/10W
R163	1-216-113-00	METAL GLAZE	470K	5%	1/10W
R164	1-216-113-00	METAL GLAZE	470K	5%	1/10W
R165	1-216-081-00	METAL GLAZE	22K	5%	1/10W
R166	1-216-049-00	METAL GLAZE	1K	5%	1/10W
R167	1-216-073-00	METAL GLAZE	10K	5%	1/10W
R168	1-216-113-00	METAL GLAZE	470K	5%	1/10W
R169	1-216-049-00	METAL GLAZE	1K	5%	1/10W
R175	1-216-083-00	METAL GLAZE	27K	5%	1/10W
R176	1-216-075-00	METAL GLAZE	12K	5%	1/10W
R177	1-216-095-00	METAL GLAZE	82K	5%	1/10W
R178	1-216-059-00	METAL GLAZE	2.7K	5%	1/10W
R179	1-216-057-00	METAL GLAZE	2.2K	5%	1/10W
R181	1-216-037-00	METAL GLAZE	330	5%	1/10W

IF (KV-X2972U) IF (KV-X2971B)

REF.NO.	PART NO.	DESCRIPTION			REMARK
		< VARIABLE RESISTOR >			
RV1	1-241-121-11	RES, ADJ, CARBON 4.7K			
		< TRANSFORMER >			
T4	1-416-017-21	COIL			
T5	1-416-018-21	COIL			

****

1-466-735-11 IF BLOCK (IFH-389F) (KV-X2971B)
****

REF.NO.	PART NO.	DESCRIPTION			REMARK
		< CAPACITOR >			
C1	1-163-017-00	CERAMIC CHIP 0.0047MF	10%	50V	
C2	1-164-232-11	CERAMIC CHIP 0.01MF	10%	50V	
C3	1-124-903-11	ELECT 1MF	20%	50V	
C4	1-164-232-11	CERAMIC CHIP 0.01MF	10%	50V	
C5	1-164-232-11	CERAMIC CHIP 0.01MF	10%	50V	
C6	1-163-017-00	CERAMIC CHIP 0.0047MF	10%	50V	
C7	1-164-232-11	CERAMIC CHIP 0.01MF	10%	50V	
C8	1-163-017-00	CERAMIC CHIP 0.0047MF	10%	50V	
C9	1-124-916-11	ELECT 22MF	20%	25V	
C10	1-164-232-11	CERAMIC CHIP 0.01MF	10%	50V	
C11	1-124-477-11	ELECT 47MF	20%	16V	
C13	1-163-059-00	CERAMIC CHIP 0.01MF	10%	50V	
C14	1-124-477-11	ELECT 47MF	20%	16V	
C15	1-124-903-11	ELECT 1MF	20%	50V	
C16	1-163-051-00	CERAMIC CHIP 0.015MF	10%	50V	
C17	1-162-638-11	CERAMIC CHIP 1MF		16V	
C18	1-162-638-11	CERAMIC CHIP 1MF		16V	
C19	1-163-141-00	CERAMIC CHIP 0.001MF	5%	50V	
C20	1-124-902-00	ELECT 0.47MF	20%	50V	
C21	1-124-903-11	ELECT 1MF	20%	50V	
C22	1-164-232-11	CERAMIC CHIP 0.01MF	10%	50V	
C23	1-124-902-00	ELECT 0.47MF	20%	50V	
C24	1-164-506-11	CERAMIC CHIP 4.7MF		16V	
C25	1-124-477-11	ELECT 47MF	20%	16V	
C26	1-164-232-11	CERAMIC CHIP 0.01MF	10%	50V	
C27	1-164-232-11	CERAMIC CHIP 0.01MF	10%	50V	
C28	1-124-477-11	ELECT 47MF	20%	16V	
C33	1-124-907-11	ELECT 10MF	20%	50V	
C34	1-124-907-11	ELECT 10MF	20%	50V	
C35	1-124-925-11	ELECT 2.2MF	20%	50V	
C36	1-124-477-11	ELECT 47MF	20%	16V	
C37	1-164-232-11	CERAMIC CHIP 0.01MF	10%	50V	
C38	1-163-017-00	CERAMIC CHIP 0.0047MF	10%	50V	
C40	1-164-232-11	CERAMIC CHIP 0.01MF	10%	50V	
C71	1-124-477-11	ELECT 47MF	20%	16V	
C72	1-164-232-11	CERAMIC CHIP 0.01MF	10%	50V	
C80	1-124-477-11	ELECT 47MF	20%	16V	
C83	1-124-477-11	ELECT 47MF	20%	16V	
C84	1-124-477-11	ELECT 47MF	20%	16V	
C85	1-124-477-11	ELECT 47MF	20%	16V	
C86	1-124-477-11	ELECT 47MF	20%	16V	
C87	1-124-477-11	ELECT 47MF	20%	16V	
C91	1-163-229-11	CERAMIC CHIP 12PF	5%	50V	
C95	1-164-337-11	CERAMIC CHIP 2.2MF		16V	
C101	1-163-017-00	CERAMIC CHIP 0.0047MF	10%	50V	
C102	1-163-017-00	CERAMIC CHIP 0.0047MF	10%	50V	
C104	1-163-017-00	CERAMIC CHIP 0.0047MF	10%	50V	
C105	1-163-017-00	CERAMIC CHIP 0.0047MF	10%	50V	
C106	1-163-017-00	CERAMIC CHIP 0.0047MF	10%	50V	
C119	1-163-369-11	CERAMIC CHIP 47PFF	5%	25V	
C121	1-126-176-11	ELECT 220MF	20%	10V	
C122	1-163-119-00	CERAMIC CHIP 120PF	5%	50V	
C131	1-126-099-11	ELECT 2.2MF	20%	35V	
		< FILTER >			
CF1	1-527-839-00	FILTER, CERAMIC			
CF2	1-567-569-11	FILTER, CERAMIC			
CF3	1-527-840-00	FILTER, CERAMIC			
CF4	1-567-570-11	FILTER, CERAMIC			
SWF1	1-579-662-11	FILTER, SURFACE WAVE			
SWF3	1-404-711-11	SAWF			
SWF4	1-579-660-11	FILTER, SAWTOOTH WAVE			
		< CONNECTOR >			
CN1	1-750-173-11	PIN, CONNECTOR (PC BOARD) 10P			
CN2	1-750-173-11	PIN, CONNECTOR (PC BOARD) 10P			
		< TRIMMER >			
CT1	1-404-801-11	TRAP, CERAMIC			
CT2	1-409-429-11	TRAP, CERAMIC			
CV1	1-141-245-00	CAP, TRIMMER			
CV1	1-141-245-00	CAP, TRIMMER			
CV3	1-141-304-21	TRIMMER, CERAMIC			
		< DIODE >			
D7	8-719-421-57	DIODE MA73-TX			
D8	8-719-421-57	DIODE MA73-TX			
D9	8-719-421-57	DIODE MA73-TX			
		< IC >			
IC1	8-759-070-75	IC M52312SP			
IC2	8-759-070-71	IC TDA9820			
IC3	8-759-979-62	IC PCF8574			
		< COIL >			
L1	1-408-419-00	INDUCTOR 68UH			
L2	1-408-419-00	INDUCTOR 68UH			
L3	1-408-407-00	INDUCTOR 6.8UH			
L4	1-408-419-00	INDUCTOR 68UH			
L5	1-408-419-00	INDUCTOR 68UH			
L7	1-408-406-00	INDUCTOR 5.6UH			
L9	1-408-419-00	INDUCTOR 68UH			
L71	1-408-419-00	INDUCTOR 68UH			
L101	1-408-399-00	INDUCTOR 1.5UH			
L121	1-408-407-00	INDUCTOR 6.8UH			
		< TRANSISTOR >			
Q1	8-729-907-06	TRANSISTOR BF199-AMMO			
Q4	8-729-920-74	TRANSISTOR 2SC2412K-QR			
Q5	8-729-115-10	TRANSISTOR 2SK105A-10			
Q6	8-729-900-52	TRANSISTOR DTC114YK			
Q7	8-729-216-22	TRANSISTOR 2SA1162-G			
Q8	8-729-920-74	TRANSISTOR 2SC2412K-QR			
Q10	8-729-920-74	TRANSISTOR 2SC2412K-QR			
Q11	8-729-920-74	TRANSISTOR 2SC2412K-QR			
Q12	8-729-920-74	TRANSISTOR 2SC2412K-QR			
Q13	8-729-920-74	TRANSISTOR 2SC2412K-QR			

IF (KV-X2971B) M2

REF.NO.	PART NO.	DESCRIPTION				REMARK
Q14	8-729-920-74	TRANSISTOR 2SC2412K-QR				
Q15	8-729-920-74	TRANSISTOR 2SC2412K-QR				
Q16	8-729-216-22	TRANSISTOR 2SA1162-G				
Q101	8-729-104-80	TRANSISTOR 2SC3355				
Q121	8-729-920-74	TRANSISTOR 2SC2412K-QR				
		< RESISTOR >				
JR2	1-216-295-00	METAL GLAZE	0	5%	1/10W	
JR3	1-216-296-00	METAL GLAZE	0	5%	1/8W	
JR5	1-216-296-00	METAL GLAZE	0	5%	1/8W	
R1	1-216-025-00	METAL GLAZE	100	5%	1/10W	
R2	1-216-065-00	METAL GLAZE	4.7K	5%	1/10W	
R3	1-216-065-00	METAL GLAZE	4.7K	5%	1/10W	
R4	1-216-041-00	METAL GLAZE	470	5%	1/10W	
R5	1-216-021-00	METAL GLAZE	68	5%	1/10W	
R6	1-216-055-00	METAL GLAZE	1.8K	5%	1/10W	
R8	1-216-051-00	METAL GLAZE	1.2K	5%	1/10W	
R9	1-216-069-00	METAL GLAZE	6.8K	5%	1/10W	
R10	1-216-071-00	METAL GLAZE	8.2K	5%	1/10W	
R11	1-216-059-00	METAL GLAZE	2.7K	5%	1/10W	
R24	1-216-280-00	METAL GLAZE	2.7M	5%	1/8W	
R25	1-216-057-00	METAL GLAZE	2.2K	5%	1/10W	
R26	1-216-061-00	METAL GLAZE	3.3K	5%	1/10W	
R27	1-216-266-00	METAL GLAZE	680K	5%	1/8W	
R28	1-216-075-00	METAL GLAZE	12K	5%	1/10W	
R29	1-216-035-00	METAL GLAZE	270	5%	1/10W	
R30	1-216-049-00	METAL GLAZE	IK	5%	1/10W	
R31	1-216-017-00	METAL GLAZE	47	5%	1/10W	
R32	1-216-043-00	METAL GLAZE	560	5%	1/10W	
R33	1-216-037-00	METAL GLAZE	330	5%	1/10W	
R34	1-216-252-00	METAL GLAZE	180K	5%	1/8W	
R35	1-216-035-00	METAL GLAZE	270	5%	1/10W	
R36	1-216-029-00	METAL GLAZE	150	5%	1/10W	
R37	1-216-049-00	METAL GLAZE	IK	5%	1/10W	
R38	1-216-099-00	METAL GLAZE	120K	5%	1/10W	
R39	1-216-089-00	METAL GLAZE	47K	5%	1/10W	
R40	1-216-049-00	METAL GLAZE	IK	5%	1/10W	
R42	1-216-061-00	METAL GLAZE	3.3K	5%	1/10W	
R43	1-216-067-00	METAL GLAZE	5.6K	5%	1/10W	
R44	1-216-027-00	METAL GLAZE	120	5%	1/10W	
R45	1-216-041-00	METAL GLAZE	470	5%	1/10W	
R46	1-216-031-00	METAL GLAZE	180	5%	1/10W	
R47	1-216-075-00	METAL GLAZE	I2K	5%	1/10W	
R48	1-216-081-00	METAL GLAZE	22K	5%	1/10W	
R49	1-216-049-00	METAL GLAZE	IK	5%	1/10W	
R53	1-216-082-00	METAL GLAZE	24K	5%	1/10W	
R54	1-216-043-00	METAL GLAZE	560	5%	1/10W	
R55	1-216-043-00	METAL GLAZE	560	5%	1/10W	
R56	1-216-065-00	METAL GLAZE	4.7K	5%	1/10W	
R57	1-216-065-00	METAL GLAZE	4.7K	5%	1/10W	
R58	1-216-041-00	METAL GLAZE	470	5%	1/10W	
R59	1-216-043-00	METAL GLAZE	560	5%	1/10W	
R60	1-216-043-00	METAL GLAZE	560	5%	1/10W	
R61	1-216-295-00	METAL GLAZE	0	5%	1/10W	
R63	1-216-043-00	METAL GLAZE	560	5%	1/10W	
R71	1-216-079-00	METAL GLAZE	18K	5%	1/10W	
R72	1-216-079-00	METAL GLAZE	18K	5%	1/10W	
R73	1-216-049-00	METAL GLAZE	1K	5%	1/10W	
R74	1-216-079-00	METAL GLAZE	18K	5%	1/10W	
R75	1-216-079-00	METAL GLAZE	18K	5%	1/10W	

REF.NO.	PART NO.	DESCRIPTION				REMARK
R76	1-216-025-00	METAL GLAZE	100	5%	1/10W	
R77	1-216-174-00	METAL GLAZE	100	5%	1/8W	
R81	1-216-095-00	METAL GLAZE	82K	5%	1/10W	
R82	1-216-121-00	METAL GLAZE	1M	5%	1/10W	
R83	1-216-025-00	METAL GLAZE	100	5%	1/10W	
R84	1-216-085-00	METAL GLAZE	33K	5%	1/10W	
R85	1-216-085-00	METAL GLAZE	33K	5%	1/10W	
R86	1-216-689-00	METAL GLAZE	39K	5%	1/10W	
R87	1-216-095-00	METAL GLAZE	82K	5%	1/10W	
R88	1-216-095-00	METAL GLAZE	82K	5%	1/10W	
R89	1-216-095-00	METAL GLAZE	82K	5%	1/10W	
R90	1-216-075-00	METAL GLAZE	12K	5%	1/10W	
R91	1-216-295-00	METAL GLAZE	0	5%	1/10W	
R92	1-216-075-00	METAL GLAZE	12K	5%	1/10W	
R93	1-216-075-00	METAL GLAZE	12K	5%	1/10W	
R94	1-216-059-00	METAL GLAZE	2.7K	5%	1/10W	
R95	1-216-059-00	METAL GLAZE	2.7K	5%	1/10W	
R96	1-216-059-00	METAL GLAZE	2.7K	5%	1/10W	
R97	1-216-057-00	METAL GLAZE	2.2K	5%	1/10W	
R98	1-216-057-00	METAL GLAZE	2.2K	5%	1/10W	
R99	1-216-057-00	METAL GLAZE	2.2K	5%	1/10W	
R100	1-216-065-00	METAL GLAZE	4.7K	5%	1/10W	
R102	1-216-065-00	METAL GLAZE	4.7K	5%	1/10W	
R103	1-216-063-00	METAL GLAZE	3.9K	5%	1/10W	
R104	1-216-049-00	METAL GLAZE	1K	5%	1/10W	
R105	1-216-033-00	METAL GLAZE	220	5%	1/10W	
R121	1-216-073-00	METAL GLAZE	10K	5%	1/10W	
R122	1-216-065-00	METAL GLAZE	4.7K	5%	1/10W	
R123	1-216-041-00	METAL GLAZE	470	5%	1/10W	
R124	1-216-041-00	METAL GLAZE	470	5%	1/10W	
R125	1-216-041-00	METAL GLAZE	470	5%	1/10W	
R301	1-216-049-00	METAL GLAZE	1K	5%	1/10W	
R302	1-216-049-00	METAL GLAZE	1K	5%	1/10W	
R303	1-216-049-00	METAL GLAZE	1K	5%	1/10W	
R304	1-216-037-00	METAL GLAZE	330	5%	1/10W	
R305	1-216-049-00	METAL GLAZE	1K	5%	1/10W	
R306	1-216-025-00	METAL GLAZE	100	5%	1/10W	
R307	1-216-037-00	METAL GLAZE	330	5%	1/10W	
R308	1-216-037-00	METAL GLAZE	330	5%	1/10W	
		< VARIABLE RESISTOR >				
RV2	1-241-120-11	RES, ADJ, CARBON 2.2K				
		< TRANSFORMER >				
T1	1-404-806-21	COIL				
T3	1-416-012-11	COIL				
T4	1-416-012-11	COIL				
T5	1-402-720-11	COIL				
		< CRYSTAL >				
X1	1-579-648-21	VIBRATOR, CERAMIC				

****

*A-1635-015-A M2 BOARD, COMPLETE
****

		< CAPACITOR >			
C001	1-163-117-00	CERAMIC CHIP 100PF		5%	50V
C002	1-163-117-00	CERAMIC CHIP 100PF		5%	50V
C003	1-163-117-00	CERAMIC CHIP 100PF		5%	50V

M2

REF.NO.	PART NO.	DESCRIPTION		REMARK
C004	1-164-222-11	CERAMIC CHIP 0.22MF		25V
C007	1-163-117-00	CERAMIC CHIP 100PF	5%	50V
C008	1-163-117-00	CERAMIC CHIP 100PF	5%	50V
C010	1-163-117-00	CERAMIC CHIP 100PF	5%	50V
C011	1-163-117-00	CERAMIC CHIP 100PF	5%	50V
C012	1-163-117-00	CERAMIC CHIP 100PF	5%	50V
C014	1-163-117-00	CERAMIC CHIP 100PF	5%	50V
C016	1-163-141-00	CERAMIC CHIP 0.001MF	5%	50V
C017	1-164-222-11	CERAMIC CHIP 0.22MF		25V
C018	1-164-505-11	CERAMIC CHIP 2.2MF		16V
C019	1-124-916-11	ELECT 22MF	20%	50V
C020	1-163-117-00	CERAMIC CHIP 100PF	5%	50V
C021	1-164-004-11	CERAMIC CHIP 0.1MF	10%	25V
C022	1-164-004-11	CERAMIC CHIP 0.1MF	10%	25V
C023	1-164-004-11	CERAMIC CHIP 0.1MF	10%	25V
C024	1-164-004-11	CERAMIC CHIP 0.1MF	10%	25V
C025	1-164-222-11	CERAMIC CHIP 0.22MF		25V
C026	1-164-222-11	CERAMIC CHIP 0.22MF		25V
C032	1-163-117-00	CERAMIC CHIP 100PF	5%	50V
C035	1-163-033-00	CERAMIC CHIP 0.022MF		50V
C036	1-164-005-11	CERAMIC CHIP 0.47MF		25V
C037	1-163-117-00	CERAMIC CHIP 100PF	5%	50V
C039	1-163-011-11	CERAMIC CHIP 0.0015MF	10%	50V
C042	1-162-638-11	CERAMIC CHIP 1MF		16V
C044	1-163-117-00	CERAMIC CHIP 100PF	5%	50V
C522	1-163-141-00	CERAMIC CHIP 0.001MF	5%	50V
C523	1-163-141-00	CERAMIC CHIP 0.001MF	5%	50V
C524	1-163-113-00	CERAMIC CHIP 68PF	5%	50V
C525	1-164-222-11	CERAMIC CHIP 0.22MF		25V
C528	1-163-105-00	CERAMIC CHIP 33PF	5%	50V
C529	1-163-169-00	CERAMIC CHIP 33PF	5%	50V
C541	1-164-232-11	CERAMIC CHIP 0.01MF	10%	50V
C542	1-163-037-11	CERAMIC CHIP 0.022MF	10%	25V
C543	1-164-161-11	CERAMIC CHIP 0.0022MF	10%	50V
C544	1-164-161-11	CERAMIC CHIP 0.0022MF	10%	50V
C546	1-164-004-11	CERAMIC CHIP 0.1MF	10%	25V
C547	1-163-020-00	CERAMIC CHIP 0.0082MF	10%	50V
C549	1-163-989-11	CERAMIC CHIP 0.033MF	10%	25V
C550	1-163-141-00	CERAMIC CHIP 0.001MF	5%	50V
C559	1-164-004-11	CERAMIC CHIP 0.1MF	10%	25V
C560	1-164-161-11	CERAMIC CHIP 0.0022MF	10%	50V
C563	1-163-031-11	CERAMIC CHIP 0.01MF		50V
C564	1-163-031-11	CERAMIC CHIP 0.01MF		50V
C565	1-163-031-11	CERAMIC CHIP 0.01MF		50V
C566	1-163-031-11	CERAMIC CHIP 0.01MF		50V
C567	1-163-009-11	CERAMIC CHIP 0.001MF	10%	50V
C568	1-163-009-11	CERAMIC CHIP 0.001MF	10%	50V
C569	1-164-161-11	CERAMIC CHIP 0.0022MF	10%	50V
C570	1-162-568-11	CERAMIC CHIP 0.33MF	10%	16V
C2001	1-163-235-11	CERAMIC CHIP 22PF	5%	50V
C2002	1-163-235-11	CERAMIC CHIP 22PF	5%	50V
C2004	1-164-222-11	CERAMIC CHIP 0.22MF		25V
C2005	1-163-038-00	CERAMIC CHIP 0.1MF		25V
C2006	1-163-038-00	CERAMIC CHIP 0.1MF		25V
C2008	1-164-222-11	CERAMIC CHIP 0.22MF		25V
C2009	1-163-105-00	CERAMIC CHIP 33PF	5%	50V
C2016	1-164-222-11	CERAMIC CHIP 0.22MF		25V
C2017	1-164-222-11	CERAMIC CHIP 0.22MF		25V
C2018	1-164-505-11	CERAMIC CHIP 2.2MF		16V
C2019	1-124-916-11	ELECT 22MF	20%	50V
C2020	1-164-222-11	CERAMIC CHIP 0.22MF		25V
C2021	1-163-113-00	CERAMIC CHIP 68PF	5%	50V
C2023	1-124-907-11	ELECT 10MF	20%	50V
C2024	1-163-117-00	CERAMIC CHIP 100PF	5%	50V
C2025	1-163-117-00	CERAMIC CHIP 100PF	5%	50V
C2027	1-164-222-11	CERAMIC CHIP 0.22MF		25V

< FILTER >

CD001	1-579-126-11	VIBRATOR, CERAMIC

< CONNECTOR >

CN1413	1-695-301-11	CONNECTOR, BOARD TO BOARD 40P
CN1426	*1-568-881-51	PIN, CONNECTOR 6P
CN1432	*1-568-882-51	PIN, CONNECTOR 7P
CN1435	*1-568-882-51	PIN, CONNECTOR 7P

< DIODE >

D001	8-719-027-82	DIODE MA3039H-TX
D2001	8-719-036-58	DIODE MA3030-H(TX)
D2002	8-719-401-31	DIODE MA3047L-TX
D2003	8-719-914-44	DIODE DAP202K
D2007	8-719-914-44	DIODE DAP202K

< IC >

IC001	8-759-168-52	IC SDA30C162-GEG
IC002	8-759-167-62	IC TMS27PC010A-15FML
	1-750-797-11	SOCKET, PLCC (IC002)
IC561	8-752-347-92	IC CXD2018Q
IC562	8-759-998-98	IC LM358D
IC563	8-759-708-05	IC NJM78L05A
IC2003	8-759-188-60	IC MB81C4256A-70PSZG

< COIL >

L001	1-408-421-00	INDUCTOR	100UH
L561	1-408-409-00	INDUCTOR	10UH
L562	1-408-409-00	INDUCTOR	10UH
L563	1-408-947-00	INDUCTOR	2.2MMH
L2001	1-410-674-31	INDUCTOR	82UH

< TRANSISTOR >

Q002	8-729-216-22	TRANSISTOR 2SA1162-G
Q003	8-729-920-74	TRANSISTOR 2SC2412K-QR
Q564	8-729-216-22	TRANSISTOR 2SA1162-G
Q565	8-729-920-74	TRANSISTOR 2SC2412K-QR
Q566	8-729-920-74	TRANSISTOR 2SC2412K-QR
Q567	8-729-901-01	TRANSISTOR DTC144EK
Q2001	8-729-920-74	TRANSISTOR 2SC2412K-QR
Q2002	8-729-920-74	TRANSISTOR 2SC2412K-QR
Q2003	8-729-216-22	TRANSISTOR 2SA1162-G
Q2004	8-729-920-74	TRANSISTOR 2SC2412K-QR
Q2005	8-729-920-74	TRANSISTOR 2SC2412K-QR
Q2006	8-729-901-01	TRANSISTOR DTC144EK-T146
Q2008	8-729-901-00	TRANSISTOR DTC124EK-T146

< RESISTOR >

JR552	1-216-296-00	METAL GLAZE	0	5%	1/8W
JR553	1-216-295-00	METAL GLAZE	0	5%	1/10W
JR555	1-216-296-00	METAL GLAZE	0	5%	1/8W
R001	1-216-025-00	METAL GLAZE	100	5%	1/10W
R002	1-216-025-00	METAL GLAZE	100	5%	1/10W

REF.NO.	PART NO.	DESCRIPTION				REMARK
R003	1-216-049-00	METAL GLAZE	1K	5%	1/10W	
R004	1-216-049-00	METAL GLAZE	1K	5%	1/10W	
R005	1-216-295-00	METAL GLAZE	0	5%	1/10W	
R006	1-216-049-00	METAL GLAZE	1K	5%	1/10W	
R007	1-216-073-00	METAL GLAZE	10K	5%	1/10W	
R008	1-216-049-00	METAL GLAZE	1K	5%	1/10W	
R010	1-216-049-00	METAL GLAZE	1K	5%	1/10W	
R011	1-216-049-00	METAL GLAZE	1K	5%	1/10W	
R012	1-216-049-00	METAL GLAZE	1K	5%	1/10W	
R013	1-216-049-00	METAL GLAZE	1K	5%	1/10W	
R014	1-216-049-00	METAL GLAZE	1K	5%	1/10W	
R016	1-216-045-00	METAL GLAZE	680	5%	1/10W	
R017	1-216-049-00	METAL GLAZE	1K	5%	1/10W	
R018	1-216-041-00	METAL GLAZE	470	5%	1/10W	
R019	1-216-049-00	METAL GLAZE	1K	5%	1/10W	
R020	1-216-049-00	METAL GLAZE	1K	5%	1/10W	
R021	1-216-065-00	METAL GLAZE	4.7K	5%	1/10W	
R022	1-216-065-00	METAL GLAZE	4.7K	5%	1/10W	
R023	1-216-025-00	METAL GLAZE	100	5%	1/10W	
R024	1-216-049-00	METAL GLAZE	1K	5%	1/10W	
R025	1-216-049-00	METAL GLAZE	1K	5%	1/10W	
R026	1-216-049-00	METAL GLAZE	1K	5%	1/10W	
R027	1-216-049-00	METAL GLAZE	1K	5%	1/10W	
R028	1-216-075-00	METAL GLAZE	12K	5%	1/10W	
R030	1-216-049-00	METAL GLAZE	1K	5%	1/10W	
R032	1-216-049-00	METAL GLAZE	1K	5%	1/10W	
R033	1-216-049-00	METAL GLAZE	1K	5%	1/10W	
R034	1-216-057-00	METAL GLAZE	2.2K	5%	1/10W	
R035	1-216-057-00	METAL GLAZE	2.2K	5%	1/10W	
R038	1-216-073-00	METAL GLAZE	10K	5%	1/10W	
R049	1-216-049-00	METAL GLAZE	1K	5%	1/10W	
R050	1-216-073-00	METAL GLAZE	10K	5%	1/10W	
R051	1-216-081-00	METAL GLAZE	22K	5%	1/10W	
R052	1-216-073-00	METAL GLAZE	10K	5%	1/10W	
R053	1-216-065-00	METAL GLAZE	4.7K	5%	1/10W	
R054	1-216-081-00	METAL GLAZE	22K	5%	1/10W	
R055	1-216-081-00	METAL GLAZE	22K	5%	1/10W	
R067	1-216-043-00	METAL GLAZE	560	5%	1/10W	
R068	1-216-043-00	METAL GLAZE	560	5%	1/10W	
R069	1-216-037-00	METAL GLAZE	330	5%	1/10W	
R070	1-216-037-00	METAL GLAZE	330	5%	1/10W	
R071	1-216-198-91	METAL GLAZE	1K	5%	1/8W	
R535	1-216-057-00	METAL GLAZE	2.2K	5%	1/10W	
R536	1-216-057-00	METAL GLAZE	2.2K	5%	1/10W	
R538	1-216-025-00	METAL GLAZE	100	5%	1/10W	
R539	1-216-657-11	METAL CHIP	1.8K	0.50%	1/10W	
R541	1-216-049-00	METAL GLAZE	1K	5%	1/10W	
R542	1-216-025-00	METAL GLAZE	100	5%	1/10W	
R544	1-216-035-00	METAL GLAZE	33K	5%	1/10W	
R545	1-216-033-00	METAL GLAZE	220	5%	1/10W	
R546	1-216-061-00	METAL GLAZE	3.3K	5%	1/10W	
R547	1-216-049-00	METAL GLAZE	1K	5%	1/10W	
R551	1-216-049-00	METAL GLAZE	1K	5%	1/10W	
R552	1-216-097-00	METAL GLAZE	100K	5%	1/10W	
R553	1-216-035-00	METAL GLAZE	33K	5%	1/10W	
R559	1-216-049-00	METAL GLAZE	1K	5%	1/10W	
R560	1-216-073-00	METAL GLAZE	10K	5%	1/10W	
R564	1-216-091-00	METAL GLAZE	56K	5%	1/10W	
R565	1-216-065-00	METAL GLAZE	4.7K	5%	1/10W	
R566	1-216-073-00	METAL GLAZE	10K	5%	1/10W	
R567	1-216-085-00	METAL GLAZE	33K	5%	1/10W	
R568	1-216-109-00	METAL GLAZE	330K	5%	1/10W	
R570	1-216-049-00	METAL GLAZE	1K	5%	1/10W	
R2001	1-216-065-00	METAL GLAZE	4.7K	5%	1/10W	
R2002	1-216-043-00	METAL GLAZE	560	5%	1/10W	
R2003	1-216-065-00	METAL GLAZE	4.7K	5%	1/10W	
R2004	1-216-037-00	METAL GLAZE	330	5%	1/10W	
R2005	1-216-041-00	METAL GLAZE	470	5%	1/10W	
R2007	1-216-073-00	METAL GLAZE	10K	5%	1/10W	
R2008	1-216-025-00	METAL GLAZE	100	5%	1/10W	
R2009	1-216-057-00	METAL GLAZE	2.2K	5%	1/10W	
R2010	1-216-025-00	METAL GLAZE	100	5%	1/10W	
R2011	1-216-057-00	METAL GLAZE	2.2K	5%	1/10W	
R2012	1-216-029-00	METAL GLAZE	150	5%	1/10W	
R2013	1-216-029-00	METAL GLAZE	150	5%	1/10W	
R2014	1-216-029-00	METAL GLAZE	150	5%	1/10W	
R2015	1-216-089-91	METAL GLAZE	47K	5%	1/10W	
R2016	1-216-089-91	METAL GLAZE	47K	5%	1/10W	
R2017	1-216-081-00	METAL GLAZE	22K	5%	1/10W	
R2018	1-216-081-00	METAL GLAZE	22K	5%	1/10W	
R2019	1-216-081-00	METAL GLAZE	22K	5%	1/10W	
R2020	1-216-057-00	METAL GLAZE	2.2K	5%	1/10W	
R2021	1-216-057-00	METAL GLAZE	2.2K	5%	1/10W	
R2025	1-216-063-00	METAL GLAZE	3.9K	5%	1/10W	
R2026	1-216-065-00	METAL GLAZE	4.7K	5%	1/10W	
R2028	1-216-055-00	METAL GLAZE	1.8K	5%	1/10W	
R2030	1-216-295-00	METAL GLAZE	0	5%	1/10W	
R2032	1-216-049-00	METAL GLAZE	1K	5%	1/10W	
R2033	1-216-295-00	METAL GLAZE	0	5%	1/10W	
R2035	1-216-075-00	METAL GLAZE	12K	5%	1/10W	
R2036	1-216-049-00	METAL GLAZE	1K	5%	1/10W	
R2037	1-216-049-00	METAL GLAZE	1K	5%	1/10W	

< CRYSTAL >

X2001	1-579-965-21	VIBRATOR, CRYSTAL

****

*A-1638-042-A C BOARD, COMPLETE
****

< CAPACITOR >

C701	1-162-114-00	CERAMIC	0.0047MF		2KV
C703	1-123-946-00	ELECT	4.7MF	20%	250V
C705	1-162-116-00	CERAMIC	680PF	10%	2KV
C708	1-163-197-00	CERAMIC CHIP	470PF	10%	50V
C709	1-163-005-11	CERAMIC CHIP	470PF	10%	50V
C710	1-163-005-11	CERAMIC CHIP	470PF	10%	50V
C711	1-101-880-00	CERAMIC	47PF	5%	50V
C712	1-163-121-00	CERAMIC CHIP	150PF	5%	50V
C713	1-163-121-00	CERAMIC CHIP	150PF	5%	50V
C714	1-163-121-00	CERAMIC CHIP	150PF	5%	50V
C716	1-124-478-11	ELECT	100MF	20%	25V

< CONNECTOR >

CN0002	1-508-786-00	PIN, CONNECTOR (5MM PITCH) 2P
CN0403	1-564-511-11	PLUG, CONNECTOR 8P
CN0421	*1-508-768-00	PIN, CONNECTOR (5MM PITCH) 6P

C D5

The components identified by shading and marked ! are critical for safety.
Replace only with the part number specified.

REF.NO.	PART NO.	DESCRIPTION				REMARK
		< DIODE >				
D701	8-719-901-33	DIODE 1SS133				
D702	8-719-901-33	DIODE 1SS133				
D703	8-719-901-33	DIODE 1SS133				
D704	8-719-901-33	DIODE 1SS133				
D705	8-719-901-33	DIODE 1SS133				
D706	8-719-901-33	DIODE 1SS133				
D707	8-719-901-33	DIODE 1SS133				
D708	8-719-901-33	DIODE 1SS133				
D709	8-719-901-33	DIODE 1SS133				
D710	8-719-901-33	DIODE 1SS133				
D713	8-719-908-03	DIODE GP08D				
		< JACK >				
J701	! 1-526-990-21	SOCKET, CRT				
		< COIL >				
L701	1-410-667-31	INDUCTOR	22UH			
L703	1-408-609-41	INDUCTOR	33UH			
L705	1-408-609-41	INDUCTOR	33UH			
L707	1-408-609-41	INDUCTOR	33UH			
		< TRANSISTOR >				
Q701	8-729-906-70	TRANSISTOR BF871				
Q702	8-729-906-70	TRANSISTOR BF871				
Q703	8-729-906-70	TRANSISTOR BF871				
Q704	8-729-906-70	TRANSISTOR BF871				
Q705	8-729-906-70	TRANSISTOR BF871				
Q706	8-729-906-70	TRANSISTOR BF871				
Q707	8-729-200-17	TRANSISTOR 2SA1091-O				
Q708	8-729-200-17	TRANSISTOR 2SA1091-O				
Q709	8-729-200-17	TRANSISTOR 2SA1091-O				
Q710	8-729-920-74	TRANSISTOR 2SC2412K-QR				
Q711	8-729-920-74	TRANSISTOR 2SC2412K-QR				
Q712	8-729-920-74	TRANSISTOR 2SC2412K-QR				
Q713	8-729-216-22	TRANSISTOR 2SA1162-G				
Q714	8-729-255-12	TRANSISTOR 2SC2551-O				
		< RESISTOR >				
JR701	1-216-296-00	METAL GLAZE	0	5%	1/8W	
JR703	1-216-296-00	METAL GLAZE	0	5%	1/8W	
R701	1-202-848-00	SOLID	680K	10%	1/2W	
R702	1-202-838-00	SOLID	100K	20%	1/2W	
R703	1-202-838-00	SOLID	100K	20%	1/2W	
R704	1-202-842-11	SOLID	220K	10%	1/2W	
R705	1-216-398-11	METAL OXIDE	5.6	5%	3W	F
R706	1-216-398-11	METAL OXIDE	5.6	5%	3W	F
R707	1-249-421-11	CARBON	2.2K	5%	1/4W	
R708	1-249-421-11	CARBON	2.2K	5%	1/4W	
R709	1-249-421-11	CARBON	2.2K	5%	1/4W	
R710	1-215-899-11	METAL OXIDE	15K	5%	2W	F
R711	1-202-820-11	SOLID	1.5K	20%	1/2W	
R712	1-215-899-11	METAL OXIDE	15K	5%	2W	F
R713	1-202-820-11	SOLID	1.5K	20%	1/2W	
R714	1-215-899-11	METAL OXIDE	15K	5%	2W	F
R715	1-202-820-11	SOLID	1.5K	20%	1/2W	
R716	1-247-700-11	CARBON	100	5%	1/4W	F
R717	1-247-807-31	CARBON	100	5%	1/4W	F
R718	1-247-700-11	CARBON	100	5%	1/4W	F
R720	1-249-417-11	CARBON	1K	5%	1/4W	F
R722	1-247-713-11	CARBON	1K	5%	1/4W	F
R724	1-249-417-11	CARBON	1K	5%	1/4W	F
R725	1-216-067-00	METAL GLAZE	5.6K	5%	1/10W	
R726	1-216-067-00	METAL GLAZE	5.6K	5%	1/10W	
R727	1-216-067-00	METAL GLAZE	5.6K	5%	1/10W	
R728	1-216-037-00	METAL GLAZE	330	5%	1/10W	
R729	1-216-037-00	METAL GLAZE	330	5%	1/10W	
R730	1-216-037-00	METAL GLAZE	330	5%	1/10W	
R731	1-216-017-00	METAL GLAZE	47	5%	1/10W	
R732	1-216-017-00	METAL GLAZE	47	5%	1/10W	
R733	1-216-017-00	METAL GLAZE	47	5%	1/10W	
R734	1-202-549-00	SOLID	100	20%	1/2W	
R735	1-216-049-00	METAL GLAZE	1K	5%	1/10W	
R738	1-216-025-00	METAL GLAZE	100	5%	1/10W	
R739	1-216-025-00	METAL GLAZE	100	5%	1/10W	
R740	1-216-025-00	METAL GLAZE	100	5%	1/10W	
R741	1-216-089-91	METAL GLAZE	47K	5%	1/10W	
R742	1-216-029-00	METAL GLAZE	150	5%	1/10W	
R743	1-249-434-11	CARBON	27K	5%	1/4W	
R747	1-216-489-11	METAL OXIDE	27K	5%	3W	F
R749	1-216-490-11	METAL OXIDE	39K	5%	3W	F
R751	1-215-926-00	METAL OXIDE	33K	5%	3W	F
R753	1-216-073-00	METAL GLAZE	10K	5%	1/10W	
R758	1-249-419-11	CARBON	1.5K	5%	1/4W	
R759	1-249-419-11	CARBON	1.5K	5%	1/4W	
R760	1-249-419-11	CARBON	1.5K	5%	1/4W	
		< VARIABLE RESISTOR >				
RV701	1-230-641-11	RES, ADJ, METAL GLAZE 2.2M				
RV702	1-241-656-11	RES, ADJ, METAL FILM 110M				

****

*A-1640-109-A D5 BOARD, COMPLETE
****

REF.NO.	PART NO.	DESCRIPTION			
		< CAPACITOR >			
C803	1-164-695-11	CERAMIC CHIP	0.0022MF	5%	50V
C804	1-136-161-00	FILM	0.047MF	5%	50V
C806	1-124-907-11	ELECT	10MF	20%	50V
C807	1-106-383-00	MYLAR	0.047MF	10%	100V
C823	1-136-177-00	FILM	1MF	5%	50V
C827	1-136-177-00	FILM	1MF	5%	50V
C847	1-164-337-11	CERAMIC CHIP	2.2MF		16V
C852	1-164-299-11	CERAMIC CHIP	0.22MF	10%	25V
C853	1-124-477-11	ELECT	47MF	20%	25V
C857	1-124-902-00	ELECT	0.47MF	20%	50V
C861	1-130-777-00	FILM	0.1MF	5%	63V
C866	1-137-364-11	FILM	0.001MF	5%	50V
C870	1-137-364-11	FILM	0.001MF	5%	50V
C871	1-130-651-00	FILM	0.001MF	2%	100V
C872	1-124-907-11	ELECT	10MF	20%	50V
C873	1-137-364-11	FILM	0.001MF	5%	50V
		< CONNECTOR >			
CN2044	*1-573-299-11	CONNECTOR, BOARD TO BOARD 10P			
		< DIODE >			
D804	8-719-901-33	DIODE 1SS133			

REF.NO.	PART NO.	DESCRIPTION	REMARK
D808	8-719-109-88	DIODE RD5.6ESB1	
D818	8-719-109-93	DIODE RD6.2ESB2	
D821	8-719-914-44	DIODE DAP202K	
D827	8-719-982-96	DIODE MTZJ-T-77-2.2A	
D830	8-719-914-44	DIODE DAP202K	
D831	8-719-914-43	DIODE DAN202K	
D832	8-719-914-44	DIODE DAP202K	
D833	8-719-914-44	DIODE DAP202K	
		< IC >	
IC802	8-759-103-93	IC UPC393C	
		< TRANSISTOR >	
Q804	8-729-216-22	TRANSISTOR 2SA1162-G	
Q805	8-729-216-22	TRANSISTOR 2SA1162-G	
Q812	8-729-920-74	TRANSISTOR 2SC2412K-QR	
Q818	8-729-216-22	TRANSISTOR 2SA1162-G	
		< RESISTOR >	
JR802	1-216-295-00	METAL GLAZE 0 5% 1/10W	
JR803	1-216-295-00	METAL GLAZE 0 5% 1/10W	
JR804	1-216-295-00	METAL GLAZE 0 5% 1/10W	
R802	1-216-077-00	METAL GLAZE 15K 5% 1/10W	
R805	1-216-679-11	METAL CHIP 15K 0.50% 1/10W	
R806	1-216-061-00	METAL GLAZE 3.3K 5% 1/10W	
R808	1-216-085-00	METAL GLAZE 33K 5% 1/10W	
R809	1-216-097-00	METAL GLAZE 100K 5% 1/10W	
R813	1-216-065-00	METAL GLAZE 4.7K 5% 1/10W	
R814	1-216-091-00	METAL GLAZE 56K 5% 1/10W	
R815	1-216-081-00	METAL GLAZE 22K 5% 1/10W	
R820	1-216-097-00	METAL GLAZE 100K 5% 1/10W	
R824	1-216-675-11	METAL CHIP 10K 0.50% 1/10W	
R828	1-216-121-00	METAL GLAZE 1M 5% 1/10W	
R829	1-249-429-11	CARBON 10K 5% 1/4W F	
R830	1-216-687-11	METAL CHIP 33K 0.50% 1/10W	
R832	1-216-083-00	METAL GLAZE 27K 5% 1/10W	
R834	1-216-079-00	METAL GLAZE 18K 5% 1/10W	
R835	1-216-057-00	METAL GLAZE 2.2K 5% 1/10W	
R837	1-216-695-11	METAL CHIP 68K 0.50% 1/10W	
R838	1-216-073-00	METAL GLAZE 10K 5% 1/10W	
R846	1-216-671-11	METAL CHIP 6.8K 0.50% 1/10W	
R847	1-216-699-11	METAL CHIP 100K 0.50% 1/10W	
R867	1-216-113-00	METAL GLAZE 470K 5% 1/10W	
R884	1-216-693-11	METAL CHIP 56K 0.50% 1/10W	
R891	1-216-079-00	METAL GLAZE 18K 5% 1/10W	

****

*A-1642-097-A D BOARD, COMPLETE
****

< CAPACITOR >

REF.NO.	PART NO.	DESCRIPTION	REMARK
C601	1-130-202-00	FILM 0.022MF 10% 400V	
C602	1-162-116-00	CERAMIC 680PF 10% 2KV	
C603	1-164-503-61	CERAMIC 0.0022MF 20% 400V	
C605	1-124-910-11	ELECT 47MF 20% 50V	
C608	1-124-903-11	ELECT 1MF 20% 50V	
C611	1-102-002-00	CERAMIC 680PF 10% 500V	
C612	1-130-481-00	FILM 0.0068MF 5% 50V	
C613	1-129-722-00	FILM 0.047MF 10% 630V	
C614	1-102-030-00	CERAMIC 330PF 10% 500V	
C615	1-128-127-51	ELECT 2200MF 20% 25V	
C616	1-162-115-00	CERAMIC 330PF 10% 1KV	
C617	1-162-116-00	CERAMIC 680PF 10% 2KV	
C618	1-162-134-11	CERAMIC 470PF 10% 2KV	
C619	1-102-030-00	CERAMIC 330PF 10% 500V	
C620	1-164-299-11	CERAMIC CHIP 0.22MF 10% 25V	
C621	1-124-347-00	ELECT 100MF 20% 160V	
C622	1-128-320-11	ELECT 2200MF 20% 16V	
C623	1-102-030-00	CERAMIC 330PF 10% 500V	
C624	1-126-800-51	ELECT 2200MF 20% 35V	
C625	1-126-800-51	ELECT 2200MF 20% 35V	
C627	1-136-553-11	FILM 0.0015MF 10% 400V	
C628	1-124-477-11	ELECT 47MF 20% 25V	
C629	1-124-907-11	ELECT 10MF 20% 50V	
C631	1-163-075-00	CERAMIC CHIP 0.047MF 10% 25V	
C632	1-137-372-11	FILM 0.022MF 5% 50V	
C633	1-164-299-11	CERAMIC CHIP 0.22MF 10% 25V	
C636	1-130-777-00	FILM 0.1MF 5% 63V	
C640	1-124-916-11	ELECT 22MF 20% 50V	
C645	1-128-571-11	ELECT 56MF 20% 50V	
C646	1-124-798-11	ELECT 1MF 20% 160V	
C647	1-124-907-11	ELECT 10MF 20% 50V	
C801	1-137-116-11	FILM 1MF 5% 200V	
C805	1-124-902-00	ELECT 0.47MF 20% 50V	
C808	1-162-114-00	CERAMIC 0.0047MF 2KV	
C809	1-124-808-51	ELECT 10MF 20% 200V	
C810	1-163-001-11	CERAMIC CHIP 220PF 10% 50V	
C812	1-162-318-11	CERAMIC 0.001MF 10% 500V	
C813	1-108-704-11	MYLAR 0.1MF 10% 200V	
C815	1-162-117-00	CERAMIC 100PF 10% 500V	
C819	1-126-103-11	ELECT 470MF 20% 16V	
C821	1-137-063-11	FILM 0.018MF 3% 0	
C822	1-162-116-00	CERAMIC 680PF 10% 2KV	
C824	1-137-366-11	FILM 0.0022MF 5% 50V	
C825	1-162-116-00	CERAMIC 680PF 10% 2KV	
C826	1-137-515-11	FILM 0.056MF 3% 400V	
C828	1-136-557-11	FILM 0.0033MF 10% 400V	
C830	1-136-189-00	FILM 0.1MF 5% 250V	
C831	1-123-932-00	ELECT 4.7MF 20% 160V	
C832	1-124-477-11	ELECT 47MF 20% 25V	
C833	1-136-126-00	FILM 0.82MF 5% 400V	
C834	1-137-114-11	FILM 0.68MF 5% 200V	
C835	1-124-480-11	ELECT 470MF 20% 25V	
C836	1-102-228-00	CERAMIC 470PF 10% 500V	
C837	1-129-702-00	FILM 0.001MF 10% 400V	
C838	1-108-704-11	MYLAR 0.1MF 10% 200V	
C839	1-123-950-00	ELECT 47MF 20% 250V	
C840	1-124-480-11	ELECT 470MF 20% 25V	
C841	1-102-228-00	CERAMIC 470PF 10% 500V	
C842	1-136-208-11	FILM 0.068MF 10% 250V	
C843	1-124-907-11	ELECT 10MF 20% 50V	
C846	1-123-024-21	ELECT 33MF 160V	
C851	1-137-364-11	FILM 0.001MF 5% 50V	
C854	1-161-754-00	CERAMIC 0.001MF 10% 2KV	
C863	1-106-383-00	MYLAR 0.047MF 10% 100V	
C869	1-130-777-00	FILM 0.1MF 5% 63V	
C875	1-102-038-00	CERAMIC 0.001MF 500V	
C877	1-124-902-00	ELECT 0.47MF 20% 50V	
C878	1-164-232-11	CERAMIC CHIP 0.01MF 10% 50V	
C879	1-102-228-00	CERAMIC 470PF 10% 500V	

D

The components identified by shading and marked ! are critical for safety.
Replace only with the part number specified.

REF.NO.	PART NO.	DESCRIPTION			REMARK
C332	1-106-383-00	MYLAR	0.047MF	10%	100V
C1501	1-163-141-00	CERAMIC CHIP	0.001MF	5%	50V
C1502	1-124-903-11	ELECT	1MF	20%	50V
C1503	1-163-141-00	CERAMIC CHIP	0.001MF	5%	50V
C1504	1-124-480-11	ELECT	470MF	20%	25V
C1505	1-124-911-11	ELECT	220MF	20%	50V
C1506	1-136-202-11	FILM	0.33MF	5%	63V
C1507	1-137-423-11	MYLAR	0.15MF	10%	100V
C1508	1-124-480-11	ELECT	470MF	20%	25V
C1509	1-124-767-00	ELECT	2.2MF	20%	50V
C1511	1-124-907-11	ELECT	10MF	20%	50V
C1512	1-124-006-11	ELECT	10MF	20%	25V
C1514	1-164-004-11	CERAMIC CHIP	0.1MF	10%	25V
C1515	1-164-004-11	CERAMIC CHIP	0.1MF	10%	25V
		< CONNECTOR >			
DY1	*1-580-798-11	CONNECTOR PIN (DY) 6P			
CN0004	1-508-786-00	PIN, CONNECTOR (5MM PITCH) 2P			
CN0009	1-568-878-51	PIN, CONNECTOR 3P			
CN0504	1-564-511-11	PLUG, CONNECTOR 8P			
CN0505	*1-568-880-51	PIN, CONNECTOR 5P			
CN0506	*1-568-880-51	PIN, CONNECTOR 5P			
CN0519	*1-568-878-51	PIN, CONNECTOR 3P			
CN0521	1-508-765-00	PIN, CONNECTOR (5MM PITCH) 3P			
CN0523	1-573-296-11	CONNECTOR, BOARD TO BOARD 10P			
CN0524	*1-568-878-51	PIN, CONNECTOR 3P			
CN0525	*1-695-294-11	PIN, CONNECTOR (PC BOARD) 6P			
CN0526	*1-568-881-51	PIN, CONNECTOR 6P			
CN0529	1-508-784-00	PIN, CONNECTOR (5MM PITCH) 1P			
CN0544	1-573-296-11	CONNECTOR, BOARD TO BOARD 10P			
CN5521	*1-568-878-51	PIN, CONNECTOR 3P			
		< DIODE >			
D601	8-719-914-44	DIODE DAP202K			
D602	8-719-302-43	DIODE RGP10GPKG23			
D604	8-719-110-39	DIODE RD15ESB1			
D605	8-719-975-56	DIODE 1SS120A			
D606	8-719-302-43	DIODE RGP10GPKG23			
D607	8-719-302-43	DIODE RGP10GPKG23			
D608	8-719-300-33	DIODE RU-3AM			
D616	8-719-110-31	DIODE RD12ESB2			
D619	8-719-914-43	DIODE DAN202K			
D620	8-719-901-33	DIODE 1SS133			
D621	8-719-302-43	DIODE EL1Z			
D624	8-719-312-39	DIODE R2K-V1			
D801	8-719-018-82	DIODE RGP02-20EL-6394			
D802	8-719-302-43	DIODE EL1Z			
D803	8-719-982-27	DIODE MTZJ-33C			
D809	8-719-110-03	DIODE RD7.5ESB2			
D811	8-719-300-33	DIODE ERB44-06TP1			
D812	8-719-908-03	DIODE GP08D			
D813	8-719-908-03	DIODE GP08D			
D814	8-719-028-29	DIODE RU30ALFS1			
D815	8-719-302-43	DIODE EL1Z			
D816	8-719-979-85	DIODE EGP20G			
D822	8-719-982-20	DIODE MTZJ-30B			
D824	8-719-028-72	DIODE RGP02-17EL-6433			
D825	8-719-914-43	DIODE DAN202K			
D826	8-719-914-43	DIODE DAN202K			
D828	8-719-901-33	DIODE 1SS133			
D1501	8-719-914-43	DIODE DAN202K			
D1503	8-719-908-03	DIODE GP08D			
D1504	8-719-982-03	DIODE MTZJ-3.6A			
		< IC >			
IC601	8-759-073-29	IC TDA4605-3			
IC602	8-759-908-15	IC TL431CLP			
IC603 !	8-749-923-44	IC SFH617G-1			
IC801	8-759-103-93	IC UPC393C			
IC803	8-759-081-31	IC MC78L12ACPRP			
IC1501	8-759-506-46	IC STV9879			
		< COIL >			
L602	1-410-397-21	FERRITE BEAD INDUCTOR 1.1UH			
L603	1-410-396-41	FERRITE BEAD INDUCTOR 0.45UH			
L604	1-410-396-41	FERRITE BEAD INDUCTOR 0.45UH			
L605	1-412-528-11	INDUCTOR	18UH		
L606	1-412-528-11	INDUCTOR	18UH		
L610	1-410-397-21	FERRITE BEAD INDUCTOR 1.1UH			
L622	1-412-533-21	INDUCTOR	47UH		
L623	1-412-533-21	INDUCTOR	47UH		
L802	1-408-947-00	INDUCTOR	2.2MMH		
L803	1-420-872-00	COIL, AIR CORE			
L804	1-410-396-41	FERRITE BEAD INDUCTOR 0.45UH			
L807	1-412-540-31	INDUCTOR	180UH		
L808	1-412-552-31	INDUCTOR	2.2MMH		
L809	1-459-104-00	COIL, WITH CORE			
L810	1-460-197-21	COIL, FERRITE (PMC)			
L811	1-412-519-11	INDUCTOR	3.3UH		
L812	1-412-519-11	INDUCTOR	3.3UH		
L813	1-412-519-11	INDUCTOR	3.3UH		
L817	1-423-963-11	TRANSFORMER, LINEARITY (HLT)			
L818	1-459-104-00	COIL, WITH CORE			
L1501	1-412-525-21	INDUCTOR	10UH		
L1502	1-412-525-21	INDUCTOR	10UH		
L1503	1-412-525-21	INDUCTOR	10UH		
		< IC LINK >			
PS601 !	1-532-686-91	LINK, IC 2.7A			
PS602 !	1-532-686-91	LINK, IC 2.7A			
PS603 !	1-532-686-91	LINK, IC 2.7A			
PS604 !	1-532-686-91	LINK, IC 2.7A			
		< TRANSISTOR >			
Q601	8-729-016-14	TRANSISTOR BUZ91A-E3155			
	4-200-001-01	HOLDER, IC (IC601)			
Q602	8-729-177-22	TRANSISTOR 2SB772-Q			
Q603	8-729-900-53	TRANSISTOR DTC114EK			
Q604	8-729-209-15	TRANSISTOR 2SD2012			
Q605	8-729-255-12	TRANSISTOR 2SC2551-O			
Q606	8-729-216-22	TRANSISTOR 2SA1162-G			
Q611	8-729-119-78	TRANSISTOR 2SC2785-HFE			
Q612	8-729-903-29	TRANSISTOR DTA144TK			
Q613	8-729-216-22	TRANSISTOR 2SA1162-G			
Q802	8-729-140-97	TRANSISTOR 2SB734-34			
Q807	8-729-119-80	TRANSISTOR 2SC2688-LK			
Q813	8-729-140-96	TRANSISTOR 2SD774-34			
Q1501	8-729-920-74	TRANSISTOR 2SC2412K-QR			
Q1502	8-729-901-01	TRANSISTOR DTC144EK			

• **M2 BOARD IC561 CXD2018Q**

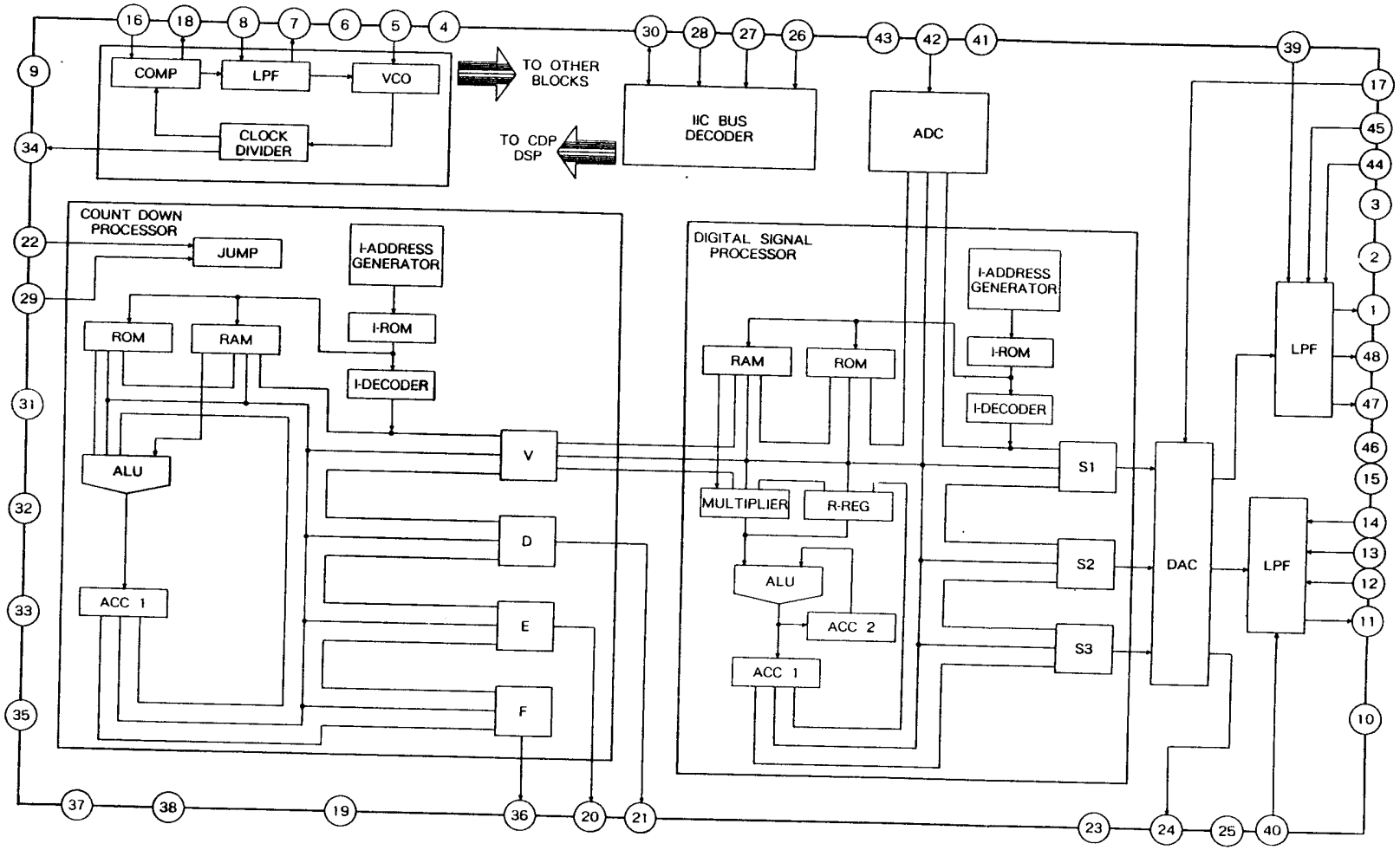

D

The components identified by shading and marked ⚠ are critical for safety.
Replace only with the part number specified.

REF.NO.	PART NO.	DESCRIPTION				REMARK
Q1503	8-729-216-22	TRANSISTOR 2SA1162-G				
Q1504	8-729-901-01	TRANSISTOR DTC144EK				
		< RESISTOR >				
R502	1-216-081-00	METAL GLAZE	22K	5%	1/10W	
R603	1-215-901-00	METAL OXIDE	33K	5%	2W	F
R604	1-260-200-11	CARBON	240K	5%	1/2W	
R605	1-216-295-00	METAL GLAZE	0	5%	1/10W	
R606	1-216-035-00	METAL GLAZE	270	5%	1/10W	
R607	1-216-210-00	METAL GLAZE	3.3K	5%	1/8W	
R608	1-215-903-11	METAL OXIDE	68K	5%	2W	F
R609	1-249-395-11	CARBON	15	5%	1/4W	
R610	1-247-881-00	CARBON	120K	5%	1/4W	
R611	1-215-886-11	METAL OXIDE	100	5%	2W	F
R612	1-247-894-11	CARBON	430K	5%	1/4W	
R613	1-216-260-11	METAL GLAZE	390K	5%	1/8W	
R614	1-216-488-11	METAL OXIDE	18K	5%	3W	F
R615	1-216-488-11	METAL OXIDE	18K	5%	3W	F
R618	1-216-449-11	METAL OXIDE	56	5%	2W	F
R620	1-216-045-00	METAL GLAZE	680	5%	1/10W	
R621	1-216-659-11	METAL CHIP	2.2K	0.50%	1/10W	
R622	1-216-041-00	METAL GLAZE	470	5%	1/10W	
R623	1-216-073-00	METAL GLAZE	10K	5%	1/10W	
R625	1-216-449-11	METAL OXIDE	56	5%	2W	F
R626	1-216-635-11	METAL CHIP	220	0.50%	1/10W	
R627	1-249-398-11	CARBON	27	5%	1/4W	F
R629	1-215-464-00	METAL	62K	1%	1/4W	
R630	1-249-421-11	CARBON	2.2K	5%	1/4W	
R631	1-216-398-11	METAL OXIDE	5.6	5%	3W	F
R633	1-249-415-11	CARBON	680	5%	1/4W	
R634	1-215-477-00	METAL	220K	1%	1/4W	
R635	1-216-073-00	METAL GLAZE	10K	5%	1/10W	
R636	1-215-925-11	METAL OXIDE	22K	5%	3W	F
R637	1-216-113-00	METAL GLAZE	470K	5%	1/10W	
R638	1-216-073-00	METAL GLAZE	10K	5%	1/10W	
R639	1-216-089-91	METAL GLAZE	47K	5%	1/10W	
R640	1-207-905-00	WIREWOUND	0.27	10%	2W	F
R642	1-216-374-00	METAL OXIDE	2.7	5%	2W	F
R643	1-249-417-11	CARBON	1K	5%	1/4W	
R645	1-215-464-00	METAL	62K	1%	1/4W	
R646	1-216-097-00	METAL GLAZE	100K	5%	1/10W	
R647	1-216-059-00	METAL GLAZE	2.7K	5%	1/10W	
R648	1-249-424-11	CARBON	3.9K	5%	1/4W	
R649	1-216-270-00	METAL GLAZE	1M	5%	1/8W	
R650	1-216-113-00	METAL GLAZE	470K	5%	1/10W	
R651	1-216-069-00	METAL GLAZE	6.8K	5%	1/10W	
R652	1-216-109-00	METAL GLAZE	330K	5%	1/10W	
R653	1-216-065-00	METAL GLAZE	4.7K	5%	1/10W	
R654	1-215-904-11	METAL OXIDE	100K	5%	2W	F
R655	1-216-065-00	METAL GLAZE	4.7K	5%	1/10W	
R656	1-216-033-00	METAL GLAZE	220	5%	1/10W	
R657	1-247-811-31	CARBON	150	5%	1/4W	
R658	1-249-403-11	CARBON	68	5%	1/4W	
R801	1-216-069-00	METAL GLAZE	6.8K	5%	1/10W	
R804	1-217-778-11	FUSIBLE	1K	5%	1W	F
R807	1-216-037-00	METAL GLAZE	330	5%	1/10W	
R811	1-216-033-00	METAL GLAZE	220	5%	1/10W	
R812	1-216-061-00	METAL GLAZE	3.3K	5%	1/10W	
R818	1-216-685-11	METAL CHIP	27K	0.50%	1/10W	
R819	1-247-755-11	CARBON	1.8K	5%	1/2W	F
R821	1-216-481-11	METAL OXIDE	1.2K	5%	3W	F
R822	1-216-481-11	METAL OXIDE	1.2K	5%	3W	F
R823	1-216-065-00	METAL GLAZE	4.7K	5%	1/10W	
R825	1-216-342-11	METAL OXIDE	0.27	5%	1W	F
R826	1-216-166-00	METAL GLAZE	47	5%	1/8W	
R833	1-216-105-00	METAL GLAZE	220K	5%	1/10W	
R836	1-216-242-00	METAL GLAZE	68K	5%	1/8W	
R839	1-216-063-00	METAL GLAZE	3.9K	5%	1/10W	
R840	1-216-097-00	METAL GLAZE	100K	5%	1/10W	
R841	1-249-397-11	CARBON	22	5%	1/4W	F
R842	1-216-454-11	METAL OXIDE	390	5%	2W	F
R848	1-215-885-00	METAL OXIDE	68	5%	2W	F
R849	1-215-884-11	METAL OXIDE	47	5%	2W	F
R851	1-247-743-11	CARBON	220	5%	1/2W	F
R852	1-249-389-11	CARBON	4.7	5%	1/4W	F
R853	1-249-443-11	CARBON	0.47	5%	1/4W	F
R854	1-249-443-11	CARBON	0.47	5%	1/4W	F
R855	1-202-826-00	SOLID	4.7K	20%	1/2W	
R858	1-249-423-11	CARBON	3.3K	5%	1/4W	
R864	1-216-686-11	METAL CHIP	30K	0.50%	1/10W	
R868	1-249-426-11	CARBON	5.6K	5%	1/4W	
R871	1-214-907-00	METAL	56K	1%	1/2W	
R872	1-249-393-11	CARBON	10	5%	1/4W	F
R873	1-249-393-11	CARBON	10	5%	1/4W	F
R876	1-249-421-11	CARBON	2.2K	5%	1/4W	
R877	1-215-907-11	METAL OXIDE	22	5%	3W	F
R889	1-216-089-91	METAL GLAZE	47K	5%	1/10W	
R893	1-215-878-00	METAL OXIDE	33K	5%	1W	F
R894	1-216-264-00	METAL GLAZE	560K	5%	1/8W	
R895	1-216-095-00	METAL GLAZE	82K	5%	1/10W	
R897	1-216-089-91	METAL GLAZE	47K	5%	1/10W	
R898	1-216-262-00	METAL GLAZE	470K	5%	1/8W	
R899	1-249-377-11	CARBON	0.47	5%	1/4W	F
R1501	1-216-676-11	METAL CHIP	11K	0.50%	1/10W	
R1502	1-216-666-11	METAL CHIP	4.3K	0.50%	1/10W	
R1503	1-216-065-00	METAL GLAZE	4.7K	5%	1/10W	
R1504	1-216-081-00	METAL GLAZE	22K	5%	1/10W	
R1505	1-216-081-00	METAL GLAZE	22K	5%	1/10W	
R1506	1-216-053-00	METAL GLAZE	1.5K	5%	1/10W	
R1508	1-216-683-11	METAL CHIP	22K	0.50%	1/10W	
R1509	1-216-689-11	METAL CHIP	39K	0.50%	1/10W	
R1510	1-249-382-11	CARBON	1.2	5%	1/4W	F
R1511	1-215-888-00	METAL OXIDE	220	5%	2W	F
R1512	1-216-370-11	METAL OXIDE	1.2	5%	2W	F
R1514	1-216-049-00	METAL GLAZE	1K	5%	1/10W	
R1550	1-216-113-00	METAL GLAZE	470K	5%	1/10W	
R1551	1-216-065-00	METAL GLAZE	4.7K	5%	1/10W	
R1552	1-216-113-00	METAL GLAZE	470K	5%	1/10W	
FS046	1-249-399-11	CARBON	33	5%	1/4W	F
		< VARIABLE RESISTOR >				
RV601	1-241-628-11	RES, ADJ, CARBON 2.2K				
		< TRANSFORMER >				
T601 ⚠	1-423-738-11	S.R.T (SMT89)				
T801 ⚠	1-453-153-11	TRANSFORMER ASSY, FLYBACK (NX-JU2602A2)				
T803	1-437-090-00	HDT				
T895	1-413-059-00	TRANSFORMER, FERRITE (DFT)				

****

D4 VM

REF.NO.	PART NO.	DESCRIPTION				REMARK
	*A-1642-116-A	D4 BOARD, COMPLETE				
		**********				
		< CAPACITOR >				
C1841	1-137-371-11	FILM	0.015MF	5%	50V	
C1844	1-106-383-00	MYLAR	0.047MF	5%	200V	
C1845	1-130-785-11	MYLAR	0.47MF	10%	100V	
C1851	1-126-103-11	ELECT	470MF	20%	16V	
C1854	1-124-910-11	ELECT	47MF	20%	50V	
C1855	1-164-232-11	CERAMIC CHIP	0.01MF	10%	50V	
C1858	1-163-275-11	CERAMIC CHIP	0.001MF	5%	50V	
C1859	1-163-275-11	CERAMIC CHIP	0.001MF	5%	50V	
C1860	1-163-989-11	CERAMIC CHIP	0.033MF	10%	25V	
C1861	1-163-989-11	CERAMIC CHIP	0.033MF	10%	25V	
C1862	1-124-657-00	ELECT	10MF	20%	50V	
C1863	1-136-104-00	FILM	0.16MF	5%	200V	
C1867	1-126-103-11	ELECT	470MF	20%	16V	
C1892	1-163-989-11	CERAMIC CHIP	0.033MF	10%	25V	
		< CONNECTOR >				
CN1823	*1-573-299-11	CONNECTOR, BOARD TO BOARD 10P				
CN1841	*1-568-878-51	PIN, CONNECTOR 3P				
CN1842	1-508-784-00	PIN, CONNECTOR (5MM PITCH) 1P				
		< DIODE >				
D1840	8-719-302-43	DIODE EL1Z				
D1841	8-719-914-43	DIODE DAN202K				
D1856	8-719-914-43	DIODE DAN202K				
D1867	8-719-987-87	DIODE ERA85-009TP3				
D1868	8-719-987-87	DIODE ERA85-009				
D1882	8-719-109-89	DIODE RD5.6ESB2				
D1883	8-719-109-89	DIODE RD5.6ESB2				
		< IC >				
IC1851	8-759-708-05	IC NJM78L05A				
IC1852	8-759-135-80	IC UPC358C				
IC1853	8-759-902-21	IC SN74LS221N				
		< COIL >				
L1841	1-459-075-00	COIL,DYNAMIC CONVERSION CHOKE				
L1843	1-459-104-00	COIL, WITH CORE				
L1852	1-459-390-00	COIL (WITH CORE)				
		< TRANSISTOR >				
Q1840	8-729-920-74	TRANSISTOR 2SC2412K-QR				
Q1841	8-729-195-82	TRANSISTOR 2SC2958-L				
Q1851	8-729-920-74	TRANSISTOR 2SC2412K-QR				
Q1854	8-729-216-22	TRANSISTOR 2SA1162-G				
Q1855	8-729-920-74	TRANSISTOR 2SC2412K-QR				
Q1856	8-729-017-05	TRANSISTOR 2SA1837				
Q1857	8-729-122-03	TRANSISTOR 2SA1220A-P				
Q1858	8-729-920-92	TRANSISTOR 2SD2096-EF				
Q1859	8-729-216-22	TRANSISTOR 2SA1162-G				
Q1860	8-729-920-74	TRANSISTOR 2SC2412K-QR				
Q1861	8-729-017-06	TRANSISTOR 2SC4793				
		< RESISTOR >				
JR1851	1-216-295-00	METAL GLAZE	0	5%	1/10W	
R1841	1-216-085-00	METAL GLAZE	33K	5%	1/10W	
R1842	1-260-111-11	CARBON	10K	5%	1/2W	
R1843	1-216-057-00	METAL GLAZE	2.2K	5%	1/10W	
R1844	1-216-057-00	METAL GLAZE	2.2K	5%	1/10W	
R1847	1-249-399-11	CARBON	33	5%	1/4W	F
R1848	1-216-434-11	METAL OXIDE	1.8K	5%	1W	F
R1849	1-260-111-11	CARBON	10K	5%	1/2W	
R1852	1-216-089-91	METAL GLAZE	47K	5%	1/10W	
R1853	1-216-691-11	METAL CHIP	47K	0.50%	1/10W	
R1854	1-216-073-00	METAL GLAZE	10K	5%	1/10W	
R1860	1-216-021-00	METAL GLAZE	68	5%	1/10W	
R1861	1-216-073-00	METAL GLAZE	10K	5%	1/10W	
R1862	1-216-055-00	METAL GLAZE	1.8K	5%	1/10W	
R1863	1-218-758-11	METAL CHIP	180K	0.50%	1/10W	
R1873	1-216-474-11	METAL OXIDE	82	5%	3W	F
R1875	1-216-683-11	METAL CHIP	22K	0.50%	1/10W	
R1877	1-216-097-00	METAL GLAZE	100K	5%	1/10W	
R1878	1-260-091-11	CARBON	220	5%	1/2W	
R1881	1-260-091-11	CARBON	220	5%	1/2W	
R1882	1-215-869-11	METAL OXIDE	1K	5%	1W	F
R1893	1-216-474-11	METAL OXIDE	82	5%	3W	F
R1894	1-216-073-00	METAL GLAZE	10K	5%	1/10W	
R1895	1-216-097-00	METAL GLAZE	100K	5%	1/10W	
R1898	1-216-037-00	METAL GLAZE	330	5%	1/10W	
R1899	1-216-037-00	METAL GLAZE	330	5%	1/10W	
		< VARIABLE RESISTOR >				
RV1851	1-241-765-11	RES, ADJ, CERMET 22K				
RV1853	1-241-628-11	RES, ADJ, CARBON 2.2K				
		< TRANSFORMER >				
T1851	1-423-786-11	TRANSFORMER, FERRITE (VPOT)				

****

	*A-1644-040-A	VM BOARD, COMPLETE			
		**********			
		< CAPACITOR >			
C1701	1-124-119-00	ELECT	330MF	20%	16V
C1702	1-101-880-00	CERAMIC	47PF	5%	50V
C1703	1-102-115-00	CERAMIC	560PF	10%	50V
C1704	1-161-830-00	CERAMIC	0.0047MF		500V
C1705	1-124-120-11	ELECT	220MF	20%	16V
C1706	1-123-935-00	ELECT	33MF	20%	160V
C1707	1-124-907-11	ELECT	10MF	20%	50V
C1708	1-101-006-00	CERAMIC	0.047MF		50V
C1709	1-108-704-11	MYLAR	0.1MF	10%	200V
C1710	1-136-207-11	FILM	0.047MF	10%	250V
C1711	1-162-318-11	CERAMIC	0.001MF	10%	500V
C1712	1-124-799-11	ELECT	2.2MF	20%	160V
C1713	1-162-318-11	CERAMIC	0.001MF	10%	500V
C1714	1-136-207-11	FILM	0.047MF	10%	250V
C1716	1-124-907-11	ELECT	10MF	20%	50V
C1718	1-124-120-11	ELECT	220MF	20%	16V
C1719	1-124-927-11	ELECT	4.7MF	20%	50V
		< CONNECTOR >			
CN1819	*1-568-882-51	PIN, CONNECTOR 7P			
CN1830	*1-568-878-51	PIN, CONNECTOR 3P			

VM H1 H2 J

REF.NO.	PART NO.	DESCRIPTION				REMARK
		< DIODE >				
D1701	8-719-901-33	DIODE 1SS133				
D1702	8-719-901-33	DIODE 1SS133				
D1703	8-719-901-33	DIODE 1SS133				
D1704	8-719-982-37	DIODE MTZJ-39C				
D1705	8-719-982-37	DIODE MTZJ-39C				
D1706	8-719-901-33	DIODE 1SS133				
D1707	8-719-901-33	DIODE 1SS133				
		< COIL >				
L1702	1-408-418-00	INDUCTOR	56UH			
		< TRANSISTOR >				
Q1701	8-729-119-78	TRANSISTOR 2SC2785-HFE				
Q1702	8-729-173-38	TRANSISTOR 2SA733-K				
Q1703	8-729-017-05	TRANSISTOR 2SA1837				
	*4-368-683-21	SPRING, TRANSISTOR (Q1703)				
Q1704	8-729-119-78	TRANSISTOR 2SC2785-HFE				
Q1705	8-729-017-06	TRANSISTOR 2SC4793				
	*4-368-683-21	SPRING, TRANSISTOR (Q1705)				
Q1706	8-729-119-78	TRANSISTOR 2SC2785-HFE				
Q1707	8-729-140-96	TRANSISTOR 2SD774-34				
Q1708	8-729-901-59	TRANSISTOR BF199				
Q1709	8-729-255-12	TRANSISTOR 2SC2551-O				
		< RESISTOR >				
R1701	1-247-807-31	CARBON	100	5%	1/4W	
R1702	1-249-420-11	CARBON	1.8K	5%	1/4W	
R1703	1-247-807-31	CARBON	100	5%	1/4W	
R1704	1-249-420-11	CARBON	1.8K	5%	1/4W	
R1705	1-247-736-11	CARBON	56	5%	1/2W	F
R1706	1-249-414-11	CARBON	560	5%	1/4W	F
R1707	1-249-412-11	CARBON	390	5%	1/4W	
R1709	1-249-416-11	CARBON	820	5%	1/4W	
R1710	1-249-385-11	CARBON	2.2	5%	1/4W	F
R1711	1-249-432-11	CARBON	18K	5%	1/4W	
R1712	1-249-435-11	CARBON	33K	5%	1/4W	
R1713	1-249-438-11	CARBON	56K	5%	1/4W	
R1714	1-249-429-11	CARBON	10K	5%	1/4W	
R1715	1-216-476-11	METAL OXIDE	180	5%	3W	F
R1716	1-249-417-11	CARBON	1K	5%	1/4W	F
R1717	1-249-432-11	CARBON	18K	5%	1/4W	
R1718	1-249-410-11	CARBON	270	5%	1/4W	
R1719	1-249-419-11	CARBON	1.5K	5%	1/4W	
R1720	1-249-441-11	CARBON	100K	5%	1/4W	
R1721	1-249-414-11	CARBON	560	5%	1/4W	
R1722	1-249-385-11	CARBON	2.2	5%	1/4W	F
R1723	1-249-429-11	CARBON	10K	5%	1/4W	
R1724	1-249-436-11	CARBON	39K	5%	1/4W	
R1725	1-249-417-11	CARBON	1K	5%	1/4W	
R1726	1-249-411-11	CARBON	330	5%	1/4W	
R1727	1-249-402-11	CARBON	56	5%	1/4W	F
R1729	1-216-451-11	METAL OXIDE	120	5%	2W	F
R1731	1-249-420-11	CARBON	1.8K	5%	1/4W	
R1732	1-249-426-11	CARBON	5.6K	5%	1/4W	
R1734	1-249-419-11	CARBON	1.5K	5%	1/4W	

****

REF.NO.	PART NO.	DESCRIPTION				REMARK
	*1-648-314-11	H1 BOARD, COMPLETE				
		**********				
		< CAPACITOR >				
C083	1-163-037-11	CERAMIC CHIP 0.022MF		10%	25V	
C087	1-163-037-11	CERAMIC CHIP 0.022MF		10%	25V	
		< CONNECTOR >				
CN1008	*1-564-516-11	PLUG, CONNECTOR 13P				
		< COIL >				
L081	1-408-409-00	INDUCTOR	10UH			
L082	1-408-409-00	INDUCTOR	10UH			
		< RESISTOR >				
JR021	1-216-295-00	METAL GLAZE	0	5%	1/10W	
R081	1-216-073-00	METAL GLAZE	10K	5%	1/10W	
R082	1-216-065-00	METAL GLAZE	4.7K	5%	1/10W	
R083	1-216-057-00	METAL GLAZE	2.2K	5%	1/10W	
R084	1-216-202-00	METAL GLAZE	1.5K	5%	1/8W	
R085	1-216-202-00	METAL GLAZE	1.5K	5%	1/8W	
		< SWITCH >				
S081	1-571-532-21	SWITCH, TACTIL				
S082	1-571-532-21	SWITCH, TACTIL				
S083	1-571-532-21	SWITCH, TACTIL				

****

REF.NO.	PART NO.	DESCRIPTION				REMARK
	*1-650-759-11	H2 BOARD				
		********				
		< CONNECTOR >				
CN1132	*1-568-882-51	PIN, CONNECTOR 7P				
		< DIODE >				
D092	8-719-948-31	DIODE LD-201VR				
D093	8-719-948-31	DIODE LD-201VR				
D094	8-719-948-31	DIODE LD-201VR				
		< IC >				
IC091	8-741-101-75	IC SBX1610-11				
		< RESISTOR >				
R091	1-249-413-11	CARBON	470	5%	1/4W	

****

REF.NO.	PART NO.	DESCRIPTION				REMARK
	*A-1651-057-A	J BOARD, COMPLETE				
		**********				
		< CAPACITOR >				
C281	1-124-119-00	ELECT	330MF	20%	16V	
C295	1-163-009-11	CERAMIC CHIP	0.001MF	10%	50V	
C296	1-163-009-11	CERAMIC CHIP	0.001MF	10%	50V	
C906	1-101-004-00	CERAMIC	0.01MF		50V	
C910	1-163-017-00	CERAMIC CHIP	0.0047MF	10%	50V	
C911	1-163-017-00	CERAMIC CHIP	0.0047MF	10%	50V	
C912	1-163-133-00	CERAMIC CHIP	470PF	5%	50V	
C913	1-163-133-00	CERAMIC CHIP	470PF	5%	50V	

J

REF.NO.	PART NO.	DESCRIPTION			REMARK
C914	1-163-121-00	CERAMIC CHIP 150PF		5%	50V
C915	1-163-121-00	CERAMIC CHIP 150PF		5%	50V
C916	1-163-017-00	CERAMIC CHIP 0.0047MF		10%	50V
C917	1-163-017-00	CERAMIC CHIP 0.0047MF		10%	50V
C922	1-124-477-11	ELECT	47MF	20%	16V
C923	1-164-346-11	CERAMIC CHIP 1MF			16V
C924	1-124-477-11	ELECT	47MF	20%	16V
C925	1-124-477-11	ELECT	47MF	20%	16V
C926	1-164-346-11	CERAMIC CHIP 1MF			16V
C927	1-124-477-11	ELECT	47MF	20%	16V
C928	1-124-477-11	ELECT	47MF	20%	16V
C929	1-124-477-11	ELECT	47MF	20%	16V
C930	1-124-477-11	ELECT	47MF	20%	16V
C931	1-164-346-11	CERAMIC CHIP 1MF			16V
C932	1-164-346-11	CERAMIC CHIP 1MF			16V
		< CONNECTOR >			
CN1209	1-695-302-11	CONNECTOR, BOARD TO BOARD 50P			
CN1210	*1-564-522-11	PLUG, CONNECTOR 7P			
CN1240	*1-564-519-11	PLUG, CONNECTOR 4P			
		< DIODE >			
D903	8-719-921-69	DIODE MTZJ9.1			
D904	8-719-921-69	DIODE MTZJ9.1			
D907	8-719-921-69	DIODE MTZJ9.1			
D908	8-719-921-69	DIODE MTZJ9.1			
D909	8-719-921-69	DIODE MTZJ9.1			
D910	8-719-921-69	DIODE MTZJ9.1			
D911	8-719-921-69	DIODE MTZJ9.1			
D912	8-719-921-69	DIODE MTZJ9.1			
D913	8-719-921-69	DIODE MTZJ9.1			
D914	8-719-921-69	DIODE MTZJ9.1			
D915	8-719-921-69	DIODE MTZJ9.1			
D916	8-719-921-69	DIODE MTZJ9.1			
D917	8-719-921-69	DIODE MTZJ9.1			
D924	8-719-921-69	DIODE MTZJ9.1			
D925	8-719-921-69	DIODE MTZJ9.1			
D926	8-719-921-69	DIODE MTZJ9.1			
D927	8-719-921-69	DIODE MTZJ9.1			
D928	8-719-921-69	DIODE MTZJ9.1			
D999	8-719-110-39	DIODE RD15ESB1			
		< JACK >			
J291	1-537-505-11	TERMINAL BOARD (2P)			
J903	1-561-534-41	SOCKET, PIN 21P			
J905	1-695-293-11	SOCKET 21P			
		< TRANSISTOR >			
Q281	8-729-920-74	TRANSISTOR 2SC2412K-QR			
Q282	8-729-920-74	TRANSISTOR 2SC2412K-QR			
		< RESISTOR >			
JR901	1-216-295-00	METAL GLAZE	0	5%	1/10W
JR906	1-216-295-00	METAL GLAZE	0	5%	1/10W
JR915	1-216-295-00	METAL GLAZE	0	5%	1/10W
JR917	1-216-296-00	METAL GLAZE	0	5%	1/8W
JR918	1-216-295-00	METAL GLAZE	0	5%	1/10W
JR919	1-216-296-00	METAL GLAZE	0	5%	1/8W
JR920	1-216-295-00	METAL GLAZE	0	5%	1/10W
JR921	1-216-295-00	METAL GLAZE	0	5%	1/10W
JR924	1-216-296-00	METAL GLAZE	0	5%	1/8W
JR926	1-216-296-00	METAL GLAZE	0	5%	1/8W
JR927	1-216-296-00	METAL GLAZE	0	5%	1/8W
JR928	1-216-296-00	METAL GLAZE	0	5%	1/8W
JR935	1-216-296-00	METAL GLAZE	0	5%	1/8W
JR942	1-216-296-00	METAL GLAZE	0	5%	1/8W
JR952	1-216-296-00	METAL GLAZE	0	5%	1/8W
JR954	1-216-295-00	METAL GLAZE	0	5%	1/10W
JR955	1-216-296-00	METAL GLAZE	0	5%	1/8W
JR956	1-216-295-00	METAL GLAZE	0	5%	1/10W
JR957	1-216-295-00	METAL GLAZE	0	5%	1/10W
R283	1-216-073-00	METAL GLAZE	10K	5%	1/10W
R284	1-216-073-00	METAL GLAZE	10K	5%	1/10W
R289	1-216-055-00	METAL GLAZE	1.8K	5%	1/10W
R291	1-249-413-11	CARBON	470	5%	1/4W
R292	1-249-413-11	CARBON	470	5%	1/4W
R911	1-216-022-00	METAL GLAZE	75	5%	1/10W
R921	1-216-022-00	METAL GLAZE	75	5%	1/10W
R922	1-216-222-00	METAL GLAZE	10K	5%	1/8W
R923	1-216-039-00	METAL GLAZE	390	5%	1/10W
R924	1-216-039-00	METAL GLAZE	390	5%	1/10W
R925	1-216-089-91	METAL GLAZE	47K	5%	1/10W
R926	1-216-039-00	METAL GLAZE	390	5%	1/10W
R927	1-216-039-00	METAL GLAZE	390	5%	1/10W
R928	1-216-089-91	METAL GLAZE	47K	5%	1/10W
R929	1-216-063-00	METAL GLAZE	3.9K	5%	1/10W
R930	1-216-113-00	METAL GLAZE	470K	5%	1/10W
R931	1-216-212-00	METAL GLAZE	3.9K	5%	1/8W
R932	1-216-113-00	METAL GLAZE	470K	5%	1/10W
R933	1-216-073-00	METAL GLAZE	10K	5%	1/10W
R934	1-216-063-00	METAL GLAZE	3.9K	5%	1/10W
R935	1-216-022-00	METAL GLAZE	75	5%	1/10W
R936	1-216-022-00	METAL GLAZE	75	5%	1/10W
R937	1-216-113-00	METAL GLAZE	470K	5%	1/10W
R938	1-216-039-00	METAL GLAZE	390	5%	1/10W
R939	1-216-188-00	METAL GLAZE	390	5%	1/8W
R940	1-216-063-00	METAL GLAZE	3.9K	5%	1/10W
R941	1-216-113-00	METAL GLAZE	470K	5%	1/10W
R942	1-216-188-00	METAL GLAZE	390	5%	1/8W
R943	1-216-089-91	METAL GLAZE	47K	5%	1/10W
R944	1-216-188-00	METAL GLAZE	390	5%	1/8W
R945	1-216-089-91	METAL GLAZE	47K	5%	1/10W
R959	1-216-674-11	METAL CHIP	9.1K	0.50%	1/10W
R960	1-216-674-11	METAL CHIP	9.1K	0.50%	1/10W
R968	1-216-055-00	METAL GLAZE	1.8K	5%	1/10W
R969	1-216-055-00	METAL GLAZE	1.8K	5%	1/10W
R970	1-216-055-00	METAL GLAZE	1.8K	5%	1/10W
R977	1-216-055-00	METAL GLAZE	1.8K	5%	1/10W

****

The components identified by shading and marked ! are critical for safety.
Replace only with the part number specified.

REF.NO.	PART NO.	DESCRIPTION	REMARK
		MISCELLANEOUS	
		**********	
!	1-406-807-21	COIL, DEGAUSSING	
!	8-451-422-11	DEFLECTION YOKE (Y29GXA)	
!	1-452-509-11	NECK ASSY, PICTURE TUBE(NA-308)	
	1-544-728-11	SPEAKER	
!	1-690-270-21	CORD, POWER(WITH CONNECTOR)	(KV-X2971B,X2973E)
!	1-590-762-11	CORD, POWER(WITH PLUG)	(KV-X2972U)
!	1-751-680-11	CORD, POWER(WITH NOISE FILTER)	(KV-X2971A,X2971D,X2971K)
V901 !	8-733-841-05	PICTURE TUBE (M68KZT10X)	

****

		ACCESSORIES AND PACKING MATERIALS
		**********
4-202-606-11	MANUAL,INSTRUCTION (KV-X2971D)	(GERMAN/ENGLISH//DUTCH/GREEK)
4-202-606-41	MANUAL,INSTRUCTION (KV-X2971A)	(ITALIAN)
4-202-606-51	MANUAL,INSTRUCTION (KV-X2971B)	(GERMAN/FRENCH/ITALIAN)
4-202-606-61	MANUAL,INSTRUCTION (KV-X2972U)	(ENGLISH)
4-202-606-71	MANUAL,INSTRUCTION (KV-X2973E)	(SPANISH)
4-202-606-81	MANUAL,INSTRUCTION (KV-X2973E)	(FRENCH/DUTCH/SWEDISH/DANISH/GERMAN FINNISH/NORWEGIAN/PORTUGUESE)
4-202-606-91	MANUAL,INSTRUCTION (KV-X2971K)	(GERMAN/ENGLISH/RUSSIAN/HUNGARIAN/POLISH)
*4-039-906-01	BAG, PROTECTION	
*4-042-127-01	CUSHION (UPPER) (ASSY)	
*4-042-126-01	CUSHION (LOWER) (ASSY)	
*4-042-128-01	INDIVIDUAL CARTON	
	REMOTE COMMANDER	
	**********	
1-467-272-11	COMMANDER,STANDARD TYPE(RM-831)	
9-903-466-01	POCKET COVER (FOR RM-831)	

****

9-974-845-01

Sony Corporation
TV Group

English
94AP7170-1
Printed in U.K.
© 1994.1